STATE	PROJECT NUMBER	SHEET NO.	TOTAL SHEETS
GA.	EDS00-0545-00(018)	266	431

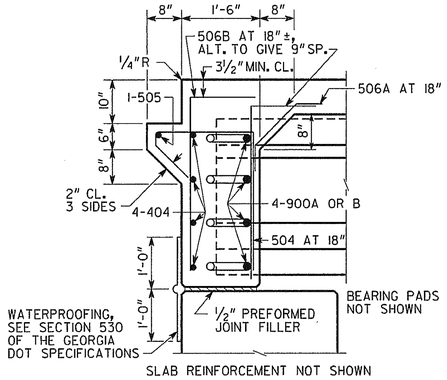

SLAB REINFORCEMENT NOT SHOWN

SECTION AT ENDWALL

SCALE: ¾" = 1'-0"

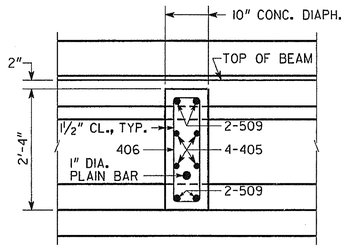

SLAB REINFORCEMENT NOT SHOWN

SECTION THRU DIAPHRAGM

SCALE: ¾" = 1'-0"

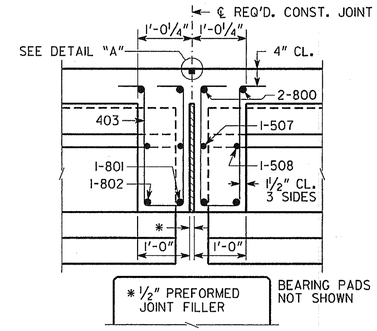

SLAB REINFORCEMENT NOT SHOWN

SECTION THRU EDGE BEAM

SCALE: ¾" = 1'-0"

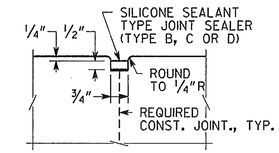

DETAIL "A"

NO SCALE

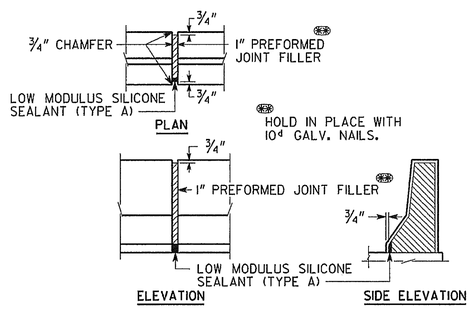

DETAILS OF 1" EXPANSION JOINT IN BARRIER

SCALE: ½" = 1'-0"

* TAPERS TO 0" AT END POST.

** AT CONTRACTOR'S OPTION, REPLACE 10" RADIUS WITH STRAIGHT INTERSECTING SLOPES.

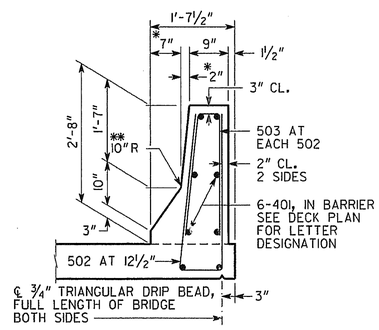

BARRIER DETAIL

SCALE: ¾" = 1'-0"

* SEAL AS PER GEORGIA DOT SPECIFICATIONS SECTION 449.2.D. SEAL SHALL BE 2" (H) BY 1⅝" WIDE PRIOR TO INSTALLATION.

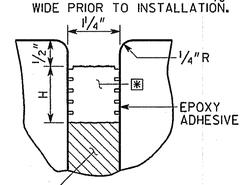

FILLER MATERIAL IN ACCORDANCE WITH SUB-SECTION 833.2.01 OF THE GEORGIA DOT SPECIFICATIONS, HOLD IN PLACE WITH 10d GALV. NAILS

LONGITUDINAL SECTION

EXPANSION JOINT DETAILS

END BENTS 1 AND 5
NO SCALE

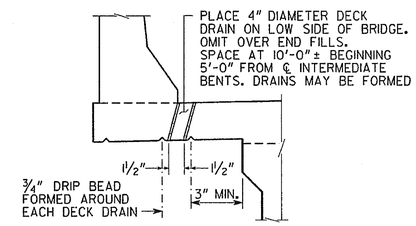

DECK DRAIN DETAIL

SCALE: ¾" = 1'-0"

BRIDGE NO. 1 LEFT AND RIGHT

GEORGIA
DEPARTMENT OF TRANSPORTATION
PRECONSTRUCTION DIVISION-OFFICE OF BRIDGE DESIGN

MISCELLANEOUS SUPERSTRUCTURE DETAILS
SR 4 (US 1) OVER OHOOPEE RIVER OVERFLOW
EMANUEL COUNTY EDS00-0545-00(018)

DATE	REVISIONS	BY

DRAWING NO. 35-05
BRIDGE SHEET 5 OF 11

SCALE AS NOTED — NOVEMBER 2010

DESIGNED WMD — CHECKED DLC — REVIEWED WEI
DRAWN WMC — DESIGN GROUP -- — APPROVED BFR

FILENAME: E22191081.DGN.DGN