TYPICAL SECTION DETAIL TO BE USED WHEN
EXISTING PAVEMENT IS TO BE RESURFACED WITH
TWO INCHES OR MORE OF ASPHALTIC CONCRETE

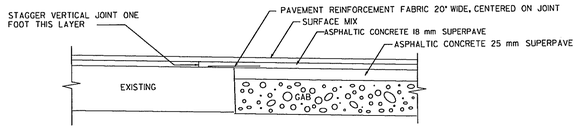

TYPICAL SECTION DETAIL TO BE USED WHEN
EXISTING PAVEMENT IS TO BE RESURFACED WITH
LESS THAN TWO INCHES OF ASPHALTIC CONCRETE

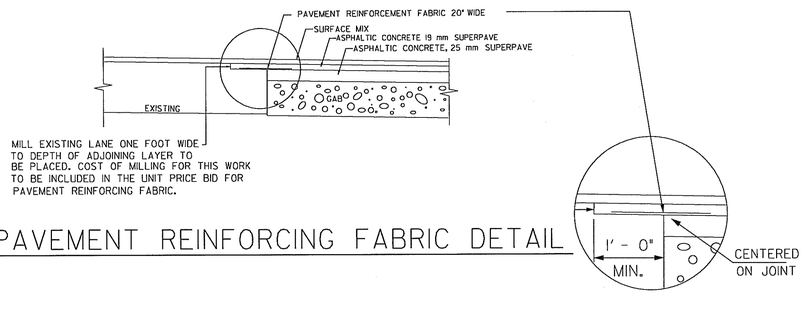

PAVEMENT REINFORCING FABRIC DETAIL

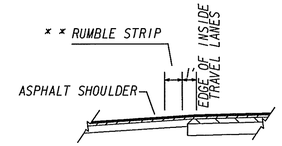

16 IN. GROUND IN PLACE, SKIPPED RUMBLE STRIPS ON ASPHALT

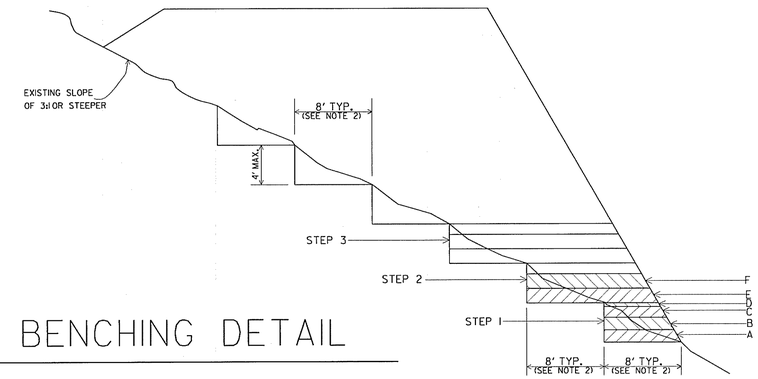

BENCHING DETAIL

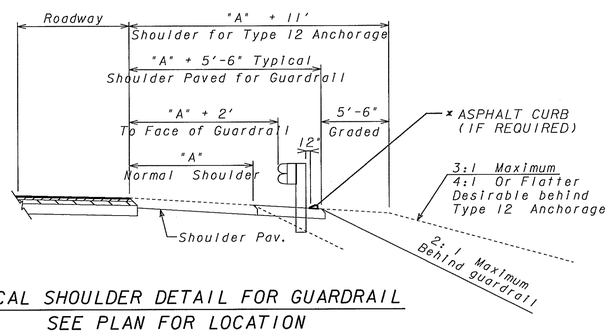

TYPICAL SHOULDER DETAIL FOR GUARDRAIL
SEE PLAN FOR LOCATION

* ASPHALT CONCRETE CURB PER SECTION 436 SHALL BE REQUIRED WHERE SPECIFIED. TYPICAL USE FOR EROSION PREVENTION OF HIGH FILL SLOPES. WHERE SPILLWAYS ARE REQUIRED.

NOTES:

1. WHERE THE EMBANKMENT FOUNDATION IS A HILLSIDE OR ANOTHER EXISTING EMBANKMENT HAVING A SLOPE 3 TO 1 OR STEEPER, THE FOUNDATION MUST BE BENCHED, WHILE THE EMBANKMENT IS BEING MADE. (SEE DIAGRAM AT LEFT)

2. THE DIAGRAM SHOWS THAT BEFORE "A" LAYER IS PLACED THE FIRST STEP (1) IS CUT INTO THE SLOPE A TYPICAL DISTANCE OF ABOUT 8 FEET.
SUCCESSIVE LAYERS B, C AND D ARE THEN PLACED BEFORE LAYER "E" IS PLACED, THE SECOND STEP IS CUT 8 FEET INTO THE SLOPE AND SUCCESSIVE LAYERS ARE AGAIN PLACED. IF IT IS ANTICIPATED THAT THE VERTICAL PART OF THE STEP WILL EXCEED 4 FEET IF AN 8 FOOT HORIZONTAL CUT IS MADE, THEN THE ACTUAL CUT STOPS, ALLOWING THE HORIZONTAL DISTANCE TO VARY.

3. THE PROCESS OF BENCHING IS CONSIDERED INCIDENTAL TO THE ITEM OF UNCLASSIFIED EXCAVATION AND BORROW IN THE CONSTRUCTION OF THE EMBANKMENT AND NO ADDITIONAL MEASUREMENT OF QUANTITY OR PAYMENT WILL BE MADE FOR BENCHING.