6/3/2013 Mon Jun 03 09:32:33 2013 clovelace \\gdot-dsn1\gocfg\resources\Gdot-2012.tbl m:\221900 - SR 4 (unit 17)\DGN\Detail of 221900 - Swale.dgn

STATE	PROJECT NUMBER	SHEET NO.	TOTAL SHEETS
GA	EDS00-0545-00(017)	567B	575

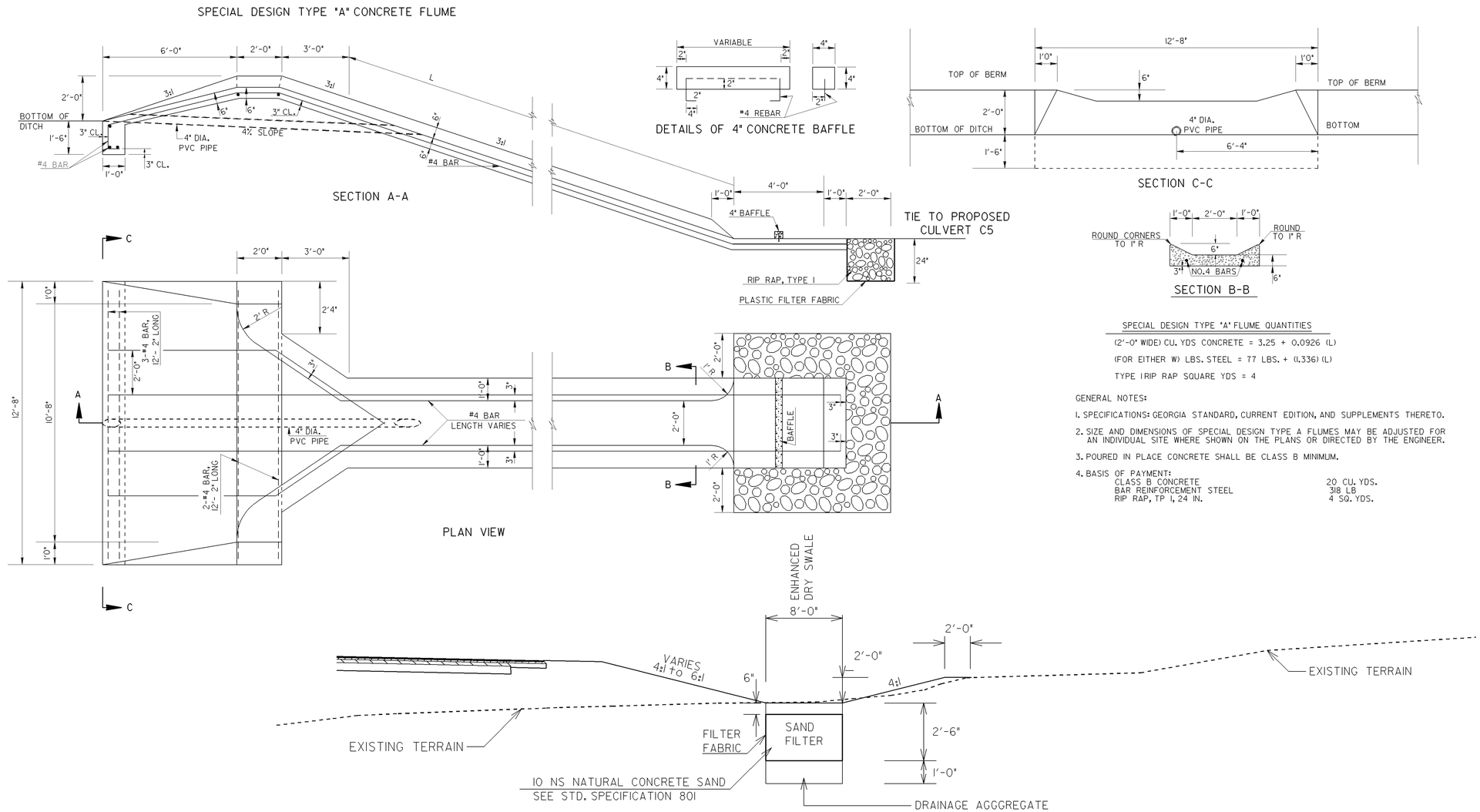

SPECIAL DESIGN TYPE "A" FLUME QUANTITIES

(2'-0" WIDE) CU. YDS CONCRETE = 3.25 + 0.0926 (L)

(FOR EITHER W) LBS. STEEL = 77 LBS. + (1.336) (L)

TYPE I RIP RAP SQUARE YDS = 4

GENERAL NOTES:

1. SPECIFICATIONS: GEORGIA STANDARD, CURRENT EDITION, AND SUPPLEMENTS THERETO.
2. SIZE AND DIMENSIONS OF SPECIAL DESIGN TYPE A FLUMES MAY BE ADJUSTED FOR AN INDIVIDUAL SITE WHERE SHOWN ON THE PLANS OR DIRECTED BY THE ENGINEER.
3. POURED IN PLACE CONCRETE SHALL BE CLASS B MINIMUM.
4. BASIS OF PAYMENT:

CLASS B CONCRETE	20 CU. YDS.
BAR REINFORCEMENT STEEL	318 LB
RIP RAP, TP 1, 24 IN.	4 SQ. YDS.

ENHANCED DRY SWALE

NOT TO SCALE

APPLY TO STA. 185+00 RIGHT TO 188+50.04 RIGHT DRY SWALE NO. 1

NOTE: INSTALL THE SAND FILTER AFTER THE FINAL GRADE HAS BEEN ESTABLISHED. MAT SIDE SLOPES IMMEDIATELY AFTER THE SAND FILTER HAS BEEN INSTALLED

USE ON CONSTRUCTION

		GEORGIA DEPARTMENT OF TRANSPORTATION	NOT TO SCALE	REVISION DATES: 10-17-11, 06-03-13	STATE OF GEORGIA DEPARTMENT OF TRANSPORTATION OFFICE: ROADWAY DESIGN EROSION CONTROL CONSTRUCTION DETAILS ENHANCED DRY SWALE DRAWING No. 56-02

9/15/2007 GPLN