STATE	PROJECT NUMBER	SHEET NO.	TOTAL SHEETS
GA.	EDS00-0545-00(017)	474N	575

WIDENED RIGHT SIDE
(DETAIL 1)

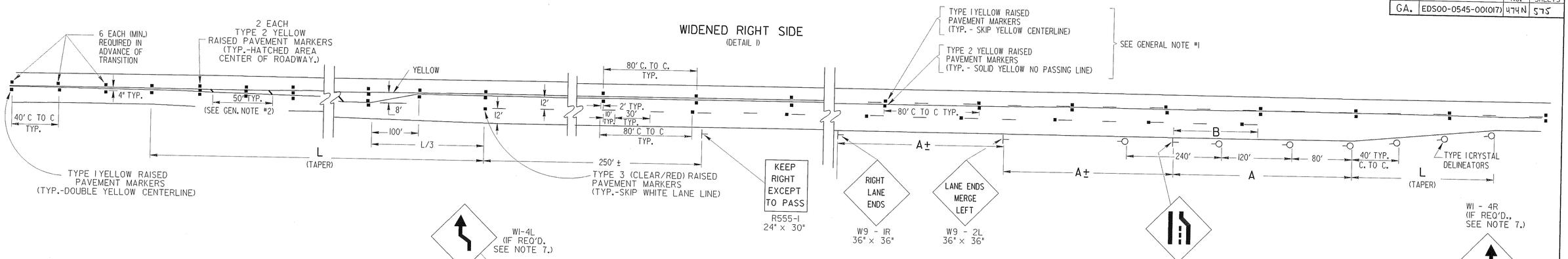

WIDENED LEFT AND RIGHT SIDES
(DETAIL 2)

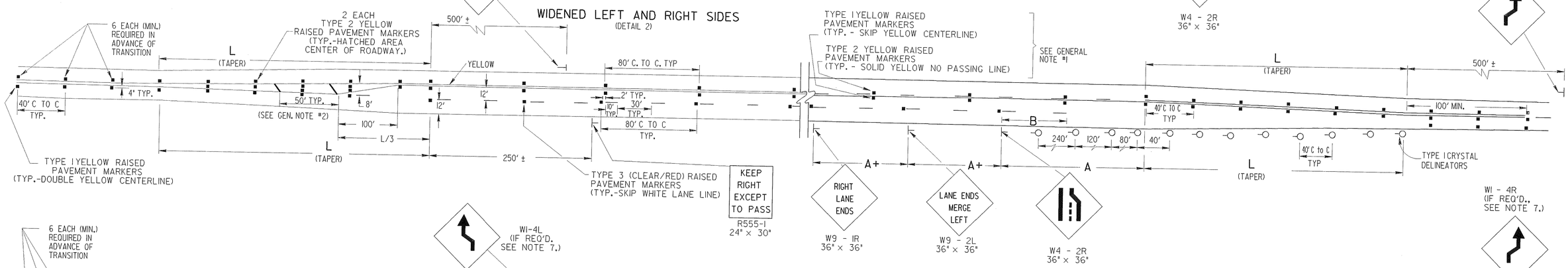

WIDENED LEFT SIDE FOR PASSING LANE ON RIGHT SIDE
(DETAIL 3)

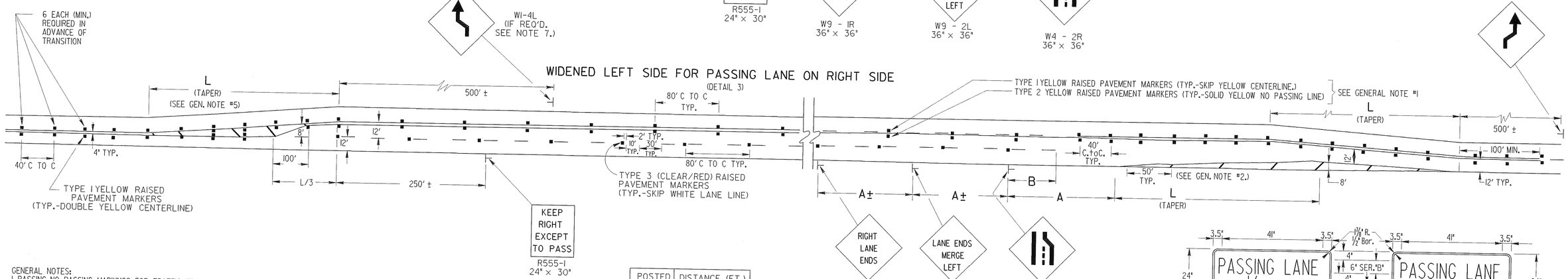

GENERAL NOTES:

1. PASSING-NO PASSING MARKINGS FOR TRAFFIC TRAVELING IN THE SINGLE LANE DIRECTION ARE TO BE DETERMINED BY THE AVAILABLE PASSING SIGHT DISTANCE .
2. DIAGONAL STRIPES ARE TO BE 24" IN WIDTH AND PLACED ON AN ANGLE OF 45^ WITH CENTERLINE. (50'C. TO C. TYP.)
3. RAISED PAVEMENT MARKERS AS SHOWN SHALL BE USED IN ALL CASES AND AS REQUIRED IN GEN. NOTE NO. 5 BELOW.
4. WHERE SPACE DOES NOT PERMIT PLACEMENT OF THE FULL SEQUENCE OF WARNING SIGNS SHOWN, THEN THE WARNING SIGN W9-2L(R) MAY BE OMITTED. IF SPACE FURTHER PROHIBITS PLACEMENT, THEN THE WARNING SIGN W9-1R(L) MAY ALSO BE OMITTED LEAVING ONLY THE W4-2R(L) SIGN. THE W4-2R(L) SIGN IS REQUIRED IN ALL CASES.
5. WHERE AN EXISTING ROADWAY IS WIDENED ON THE LEFT (SEE DETAIL 3) OF EXISTING PAVING, TO ADD A PASSING LANE, THE WIDENING SHOULD BE ACCOMPLISHED GEOMETRICALLY, IF THERE ARE NOT ANY EXISTING HORIZONTAL CURVES AT THE LOCATION OF A PASSING LANE, A TAPER OFFSET OF 1FOOT IN 55 FEET IS PERMISSABLE. RAISED PAVEMENT MARKERS SHALL BE INSTALLED WITH WIDENING ON THE LEFT SIDE AS SHOWN IN DETAIL 3 ABOVE.
6. TAPER LENGTHS SHALL BE EQUAL TO THE MINIMUM OR GREATER, BASED ON THE M.U.T.C.D. FORMULAS SHOWN BELOW.
7. WI-4 SIGNS ARE TO BE OMITTED EXCEPT AT LOCATIONS AS SPECIFIED BY THE ENGINEER.
8. EITHER A D 13-3 SIGN OR A D 13-4 SIGN, AS SPECIFIED IN THE PLANS OR BY THE ENGINEER, MAY BE REQUIRED IN ADVANCE OF EACH PASSING LANE; THESE SIGNS WILL HAVE A WHITE REFLECTORIZED LEGEND AND BORDER ON A GREEN REFLECTORIZED BACKGROUND.

POSTED SPEED (MPH)	DISTANCE (FT.) A	DISTANCE (FT.) B
55	950	475
45	750	375
35	550	275

TAPER FORMULA:

L = S x W FOR SPEEDS OF 45 M.P.H. OR GREATER
L = $WS^2/60$ FOR SPEEDS OF 40 M.P.H. OR LESS

WHERE:

L = MINIMUM LENGTH OF TAPER, IN FEET
S = POSTED SPEED LIMIT OR 85 PERCENTILE SPEED (M.P.H.)
W = WIDTH OF OFFSET, FEET

R 555-1

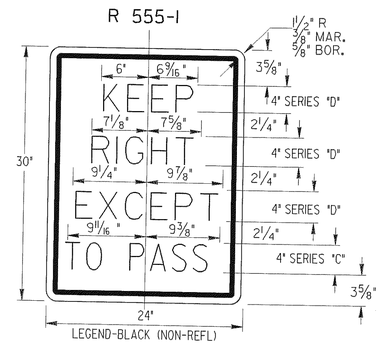

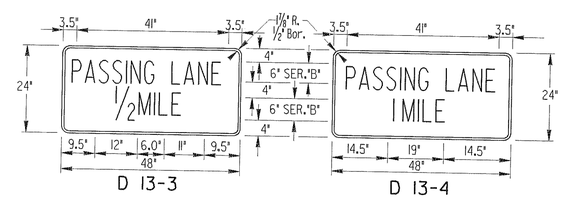

REVISION	DATE
REVISED SPEED-DIST. CHART	3-30-06
SPEED-DIST. CHART	12-9-96
REV. RPM TP. 3	1- 6-95
REV. GEN. NOTE No. 8	5-25-93
ADD. R 555-1 SIGN	8-16-90
NO END LT. LANE	11-18-88
REV. TAPERS, ADD FORMULA	8- 2-85

BY	
G.L.O.	
R.M.U.	
R.M.U.	
R.M.U.	
R.M.U.	
W.C.L.	
R.M.U.	

DEPARTMENT OF TRANSPORTATION
STATE OF GEORGIA

STANDARD

TAPERS, SIGNS, AND MARKINGS FOR PASSING LANES

NO SCALE

FEB., 1983

DES. W.C.L.
DRW. N.M.
TRA. G.M.E.
CHK. R.M.U.

(SUBMITTED) STATE ROAD & AIRPORT DESIGN ENGINEER
(APPROVED) CHIEF ENGINEER

NUMBER 9121