STATE	PROJECT NUMBER	SHEET NO.	TOTAL SHEETS
GA.	EDS00-0545-00(017)	474 G	575

DETAILS OF DROP INLET WITH DOUBLE WEIR OPENING

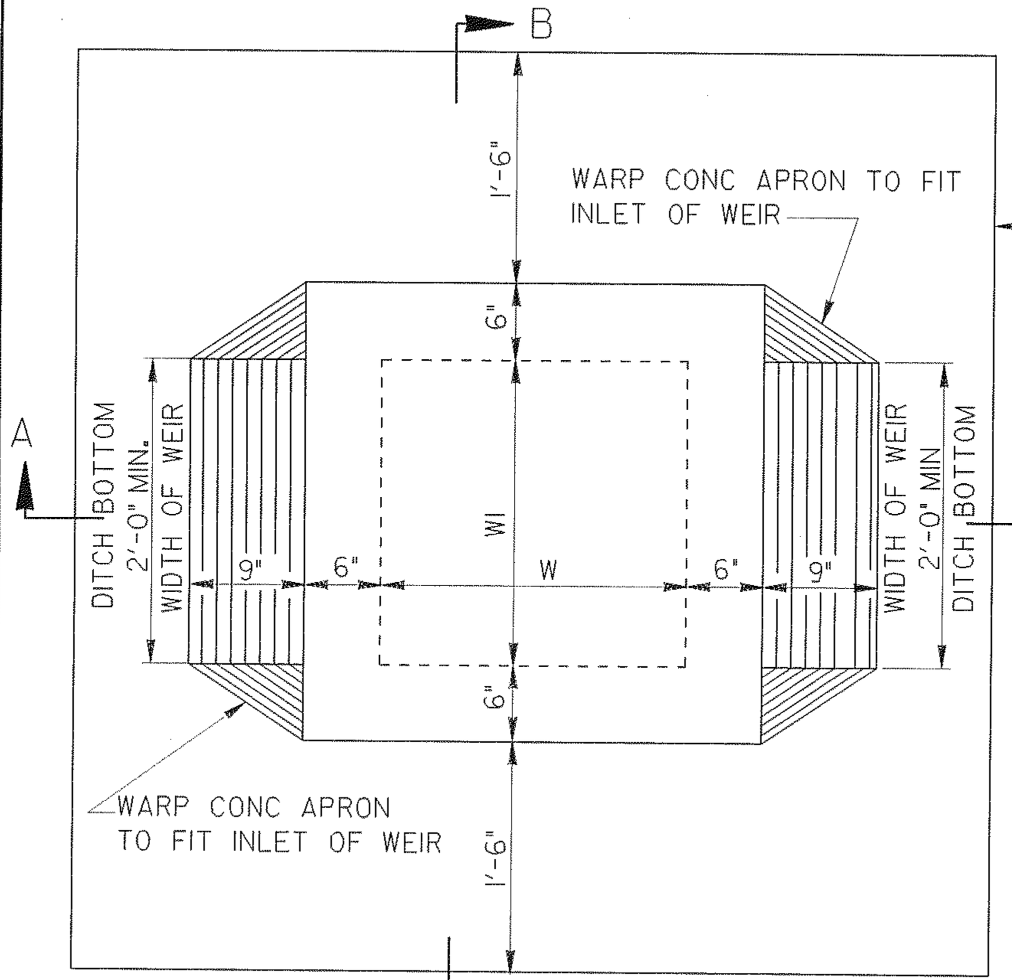

SCALE: 1" = 1FT.

ISOMETRIC VIEW
(SINGLE WEIR OPENING)

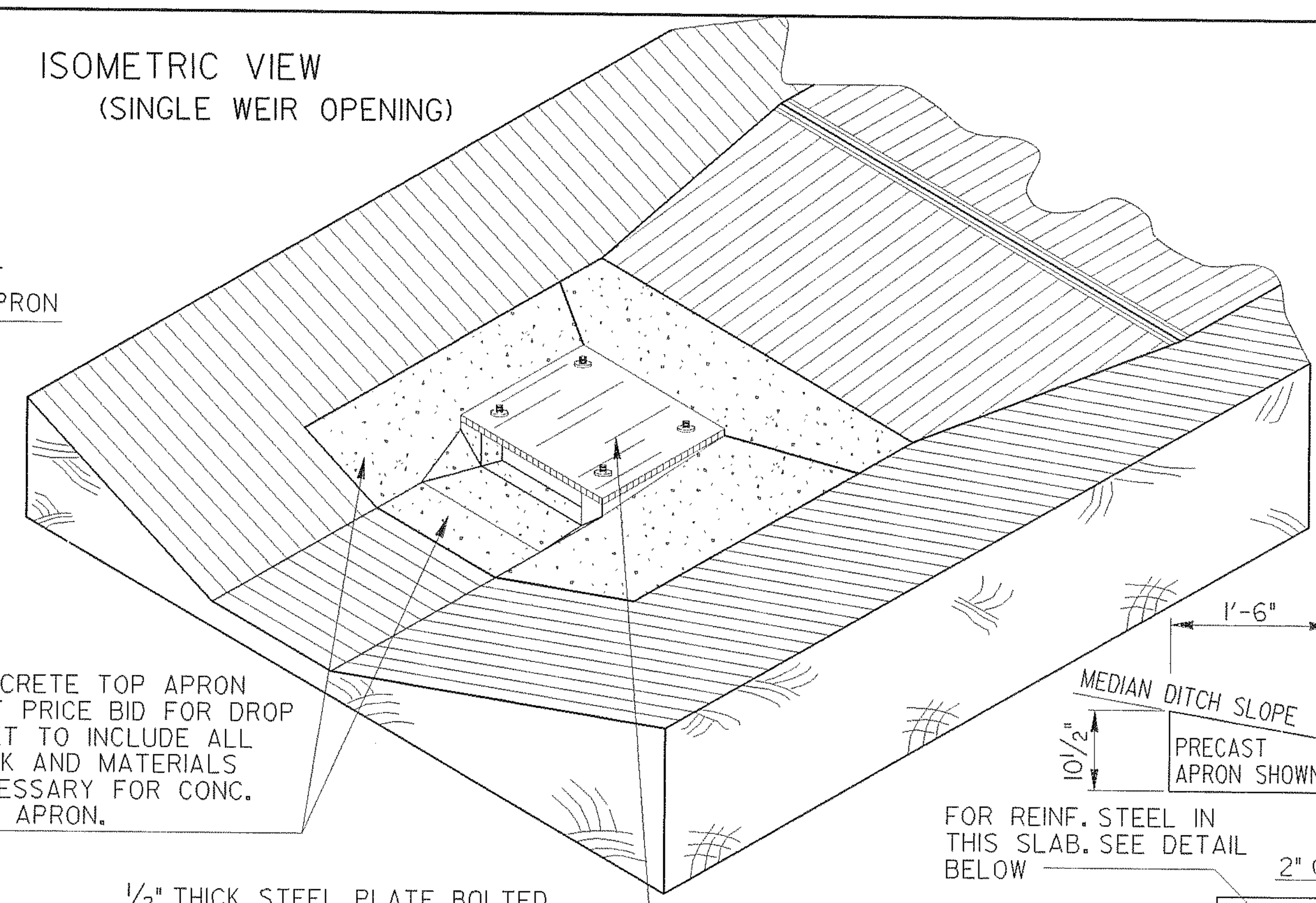

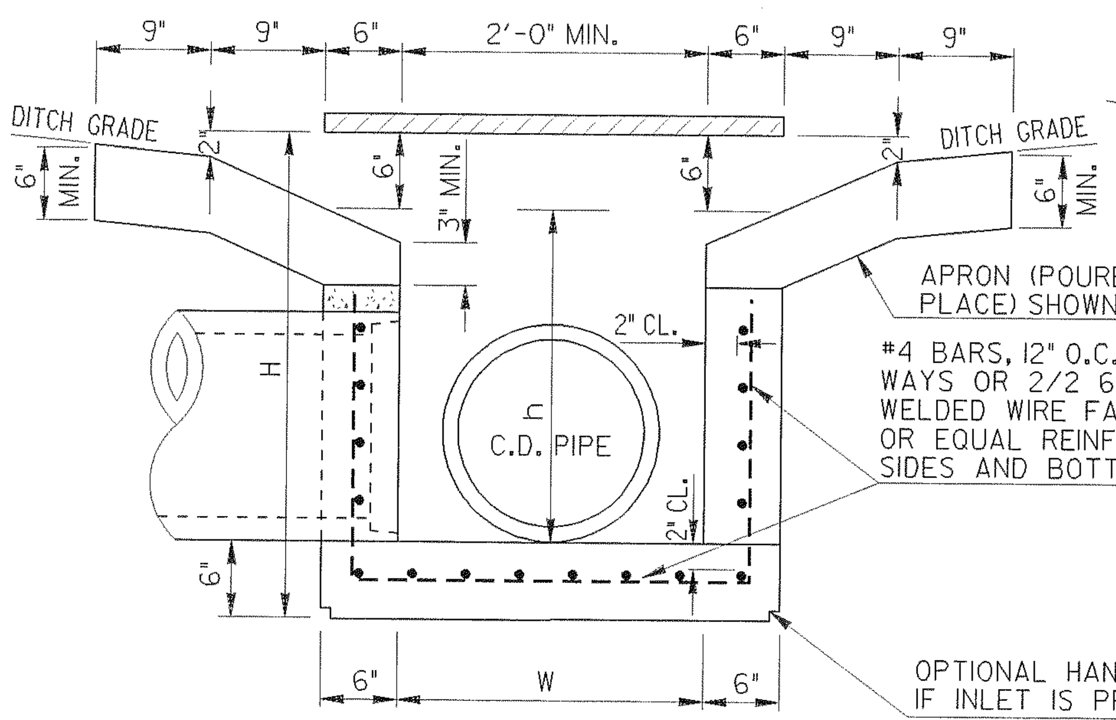

SECTION A-A (CONC. BOX)

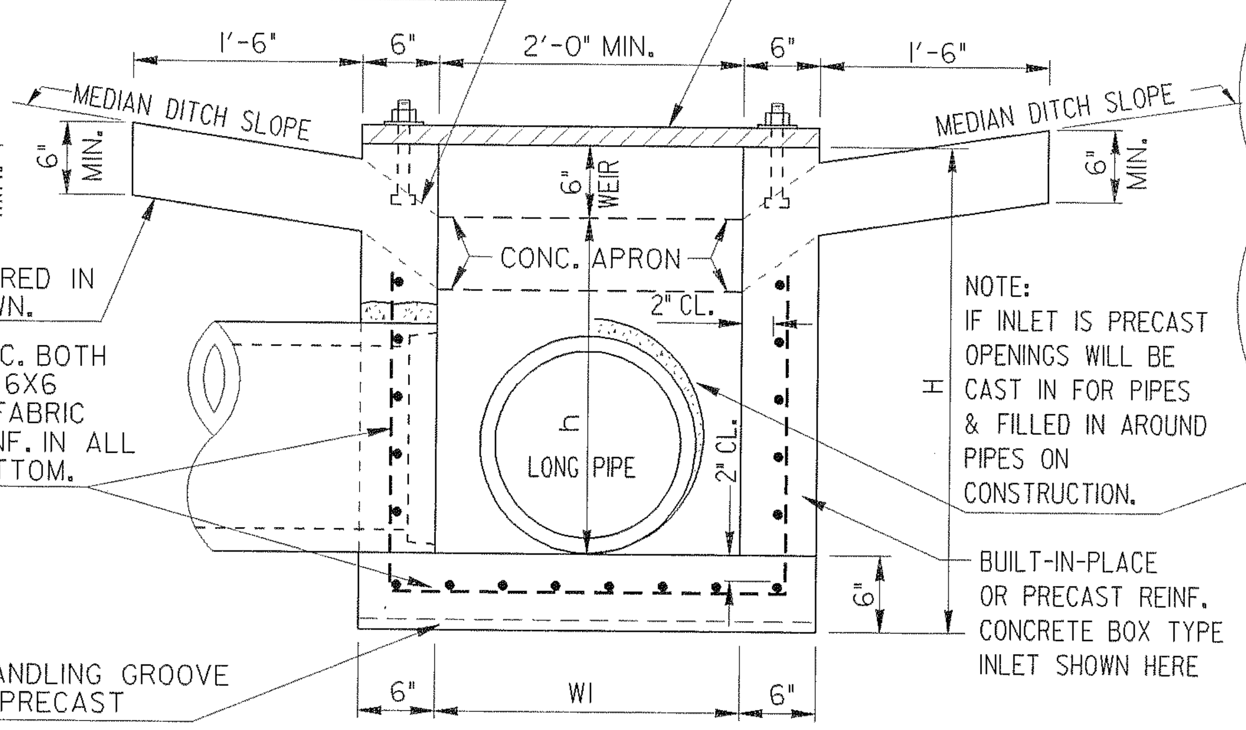

SECTION B-B (CONC. BOX)

SCALE : 1" = 1FT.

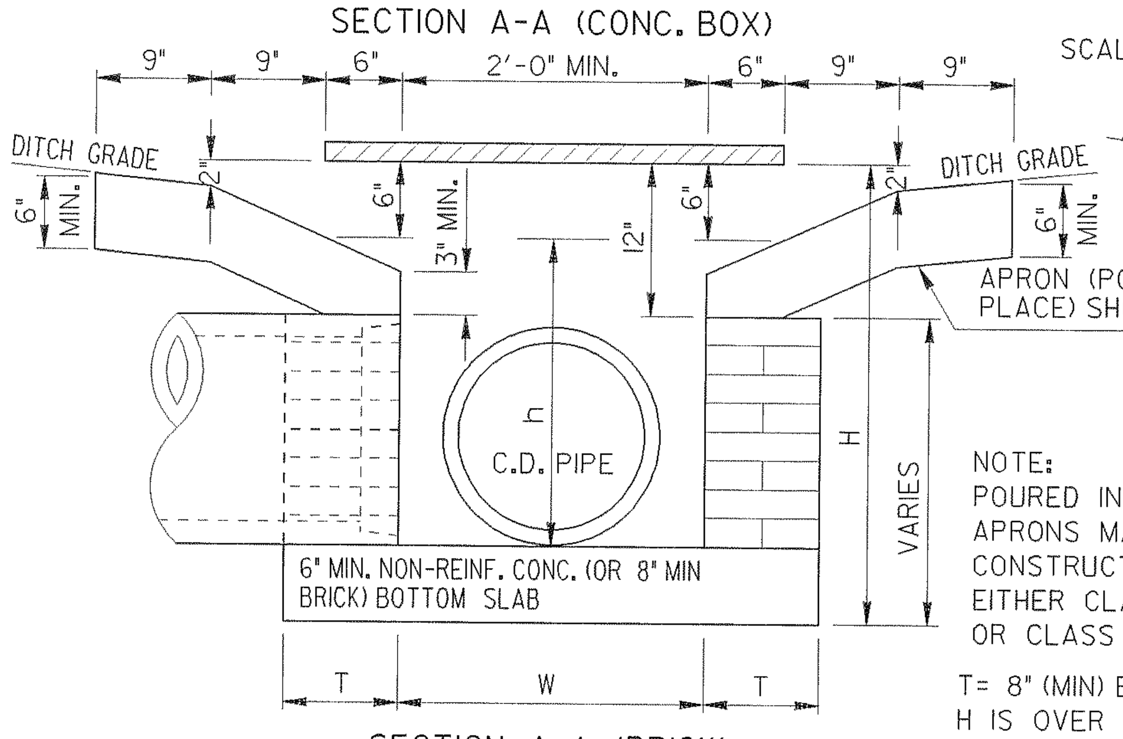

SECTION A-A (BRICK)

NOTE:
POURED IN PLACE APRONS MAY BE CONSTRUCTED WITH EITHER CLASS "A" OR CLASS "B" CONC.

T= 8" (MIN) EXCEPT WHERE H IS OVER 10 FT. SEE DETAIL AT RIGHT

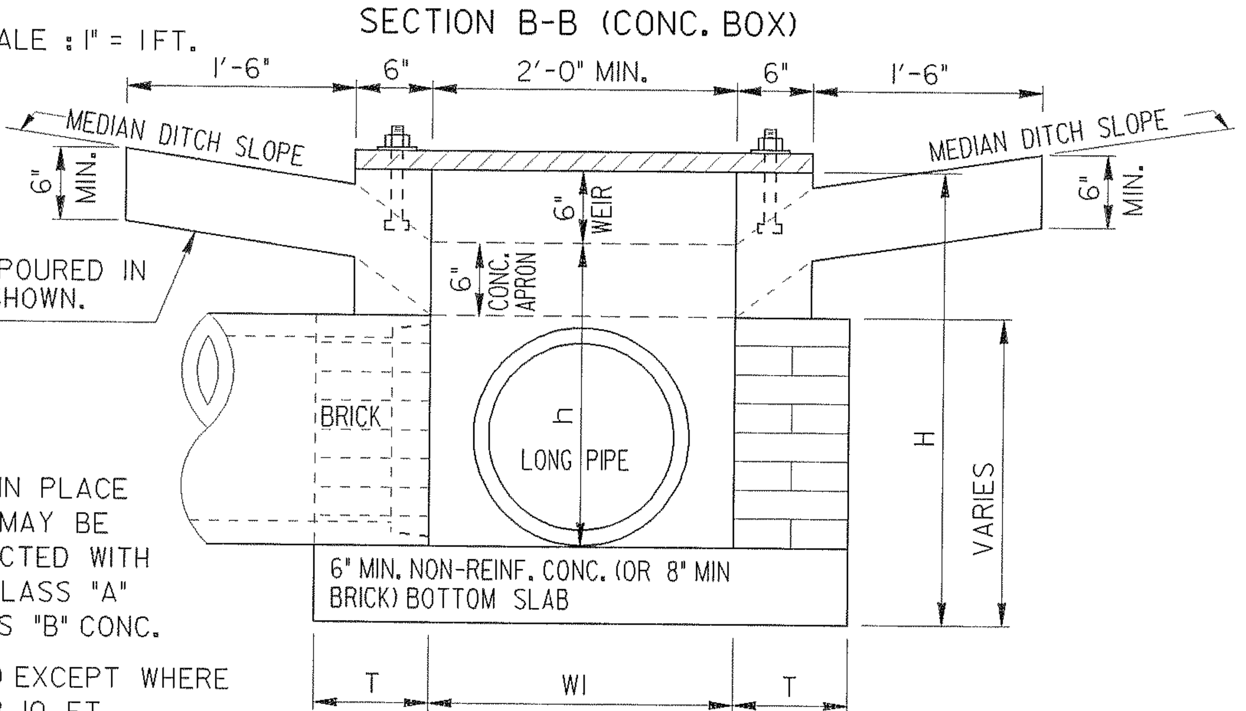

SECTION B-B (BRICK)

SCALE: 1" = 1FT.

DETAIL AND ARRANGEMENT OF LADDER BARS

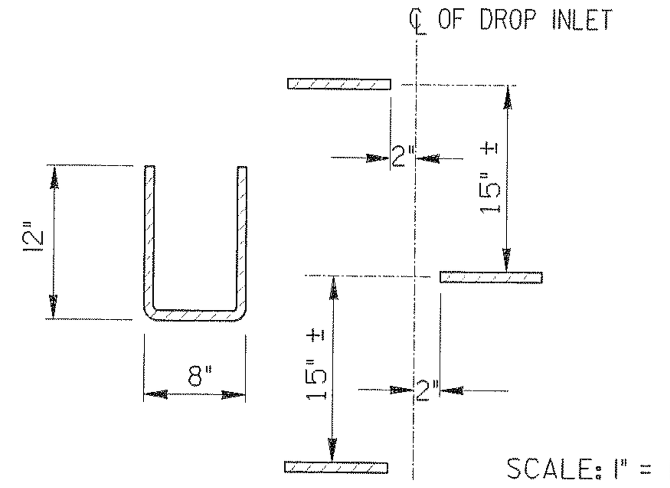

SCALE: 1" = 1'-0"

LADDER BARS ARE REQUIRED IN ALL INLETS, WHERE h=OVER 4'-0". NUMBER AND LOCATION OF LADDER BARS TO BE AS DIRECTED BY THE ENGINEER. AN ALTERNATE STEP MAY BE SUBSTITUTED, IF APPROVED BY THE LABORATORY.

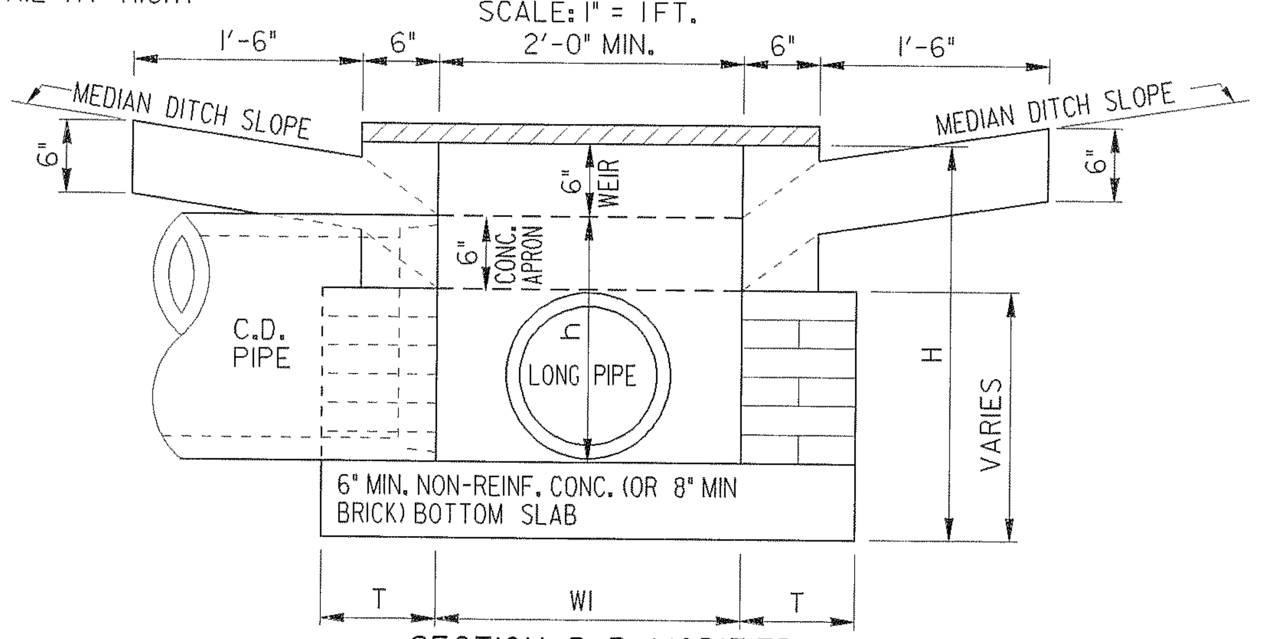

SECTION B-B MODIFIED
(C.D. PIPE IS 6" MIN. LARGER THAN LONG PIPE)

DETAIL OF SINGLE WEIR OPENING

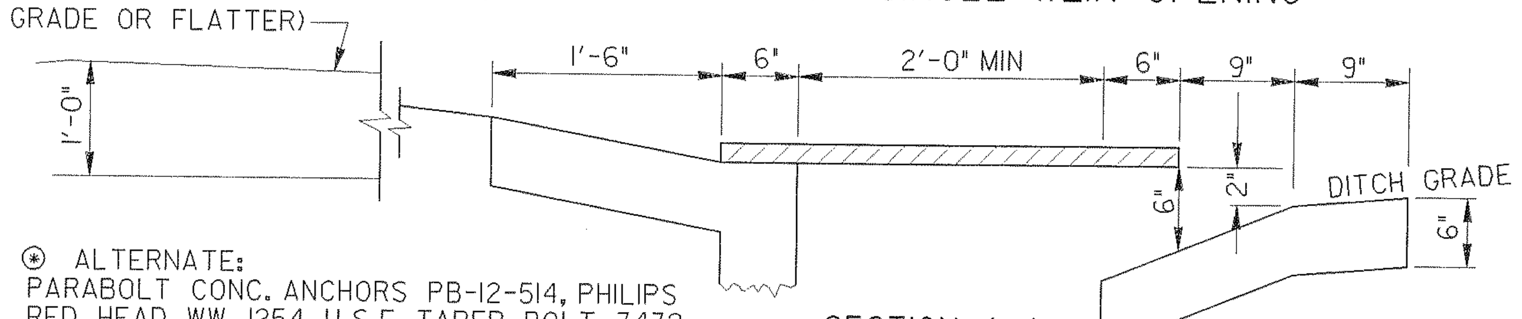

SECTION A-A

⊛ ALTERNATE:
PARABOLT CONC. ANCHORS PB-12-514, PHILIPS RED HEAD WW 1254, U.S.E. TAPER BOLT 3432 OR AN EQUAL 1/2" DIA. ANCHOR BOLT MAY BE USED TO SECURE THE STEEL PLATE.

DROP INLET WITH ENLARGED BASE

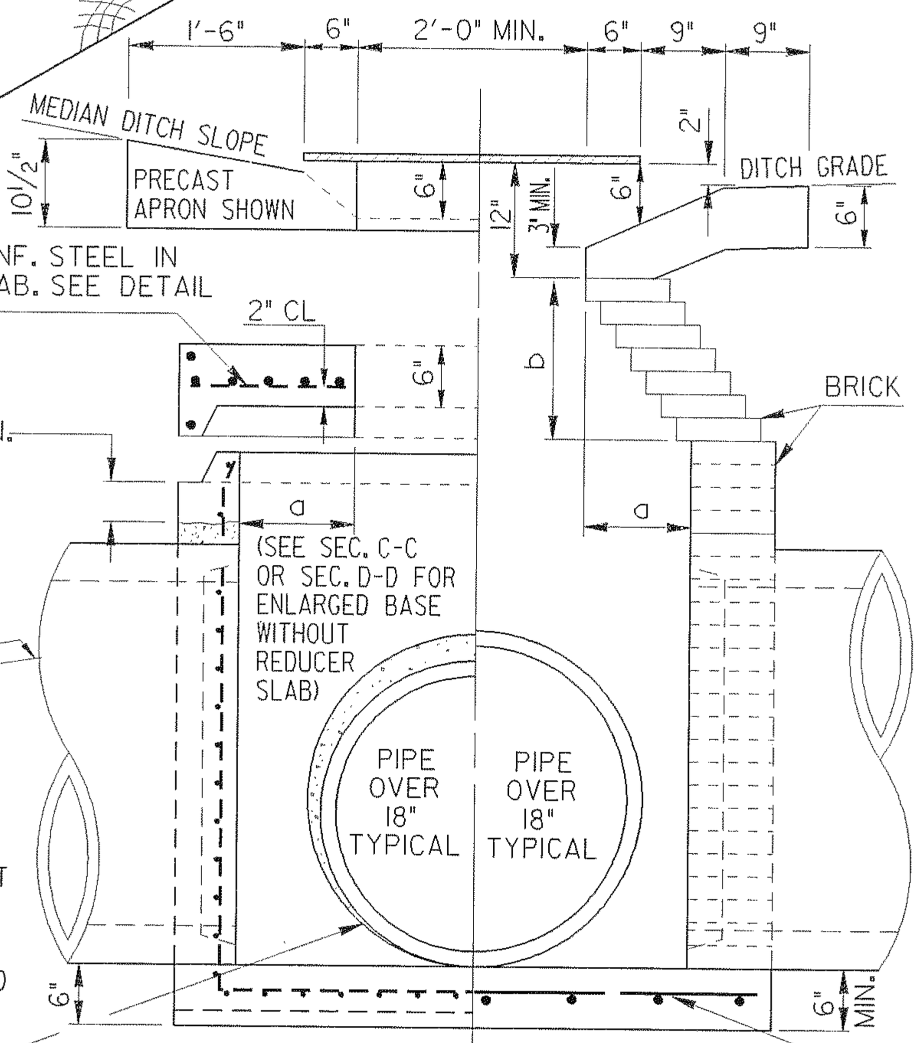

REINF. CONC. (HALF-SECTION)

BRICK (HALF-SECTION)

DROP INLET WITH ADDITIONAL HEIGHT
(DETAILS SHOWN ARE TYPICAL BOX ENCLOSURE FOR PIPE MAY BE BRICK MASONARY WITH PRECAST RISERS, ALSO SEE STD.1040 FOR ADAPTERS USED WITH CIRCULAR ALTERNATES.)

NOTE:
DETAILS NOT SHOWN FOR INLETS WITH ENLARGED BASES AND/OR ADDITIONAL HEIGHT WILL BE AS SHOWN ELSEWHERE

NOTE:
HALF-SECTIONS ARE SYMMETRICAL ABOUT ℄ OF THE TYPE CONSTRUCTION UTILIZED.

NO SCALE

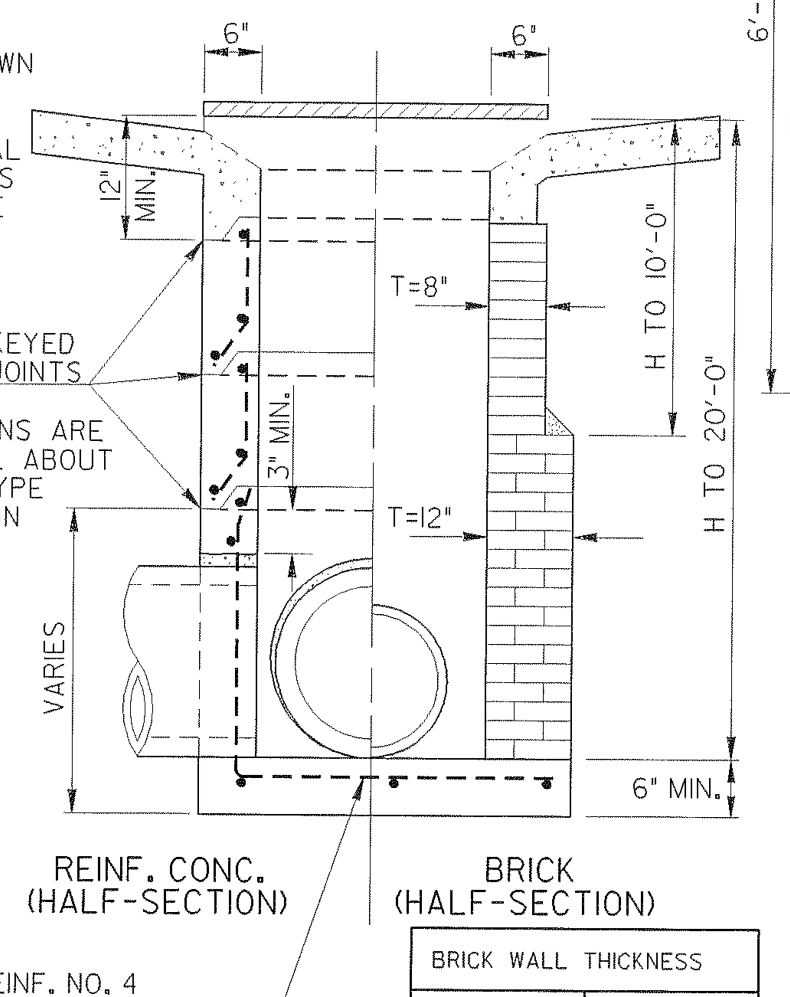

REINF. CONC. (HALF-SECTION)

BRICK (HALF-SECTION)

BOTTOM SLAB REINF. NO. 4 BARS @12" O.C. BOTH WAYS FOR STRUCTURES SHOWN HERE.

BRICK WALL THICKNESS	
H	T
to 10'	8"
10' to 20'	12"
20' to 30'	16"

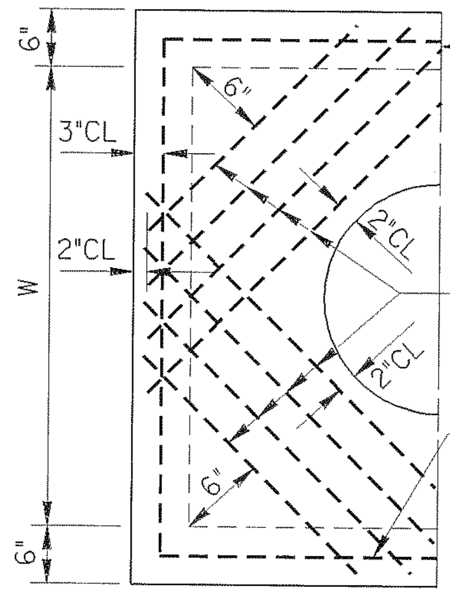

PLAN FOR REINF. STEEL
SCALE: 3/4" = 1'-0"

REDUCER SLAB
(HALF-SECTION)

NOTE:
REDUCER SLAB SHALL BE REQUIRED FOR SKEWED ALIGNMENT IF APRON IS POURED IN PLACE OR IF W OR WI IS OVER 3'-0".

TYPICAL PLAN FOR SKEWED PIPE

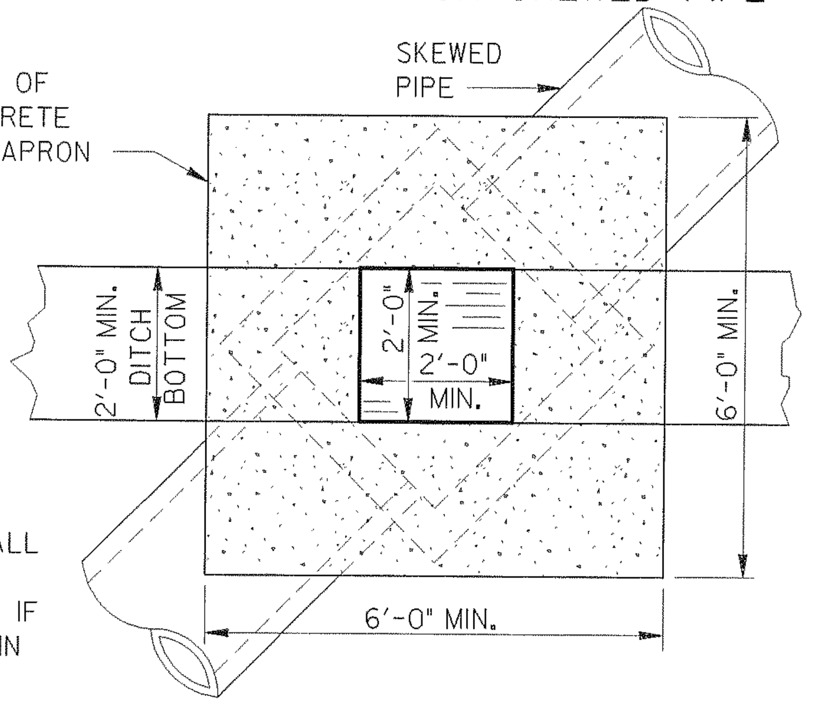

REINFORCING FOR OPTIONAL PRECAST APRON
(MAY BE USED WITH A PRECAST OR BUILT-IN-PLACE INLET)

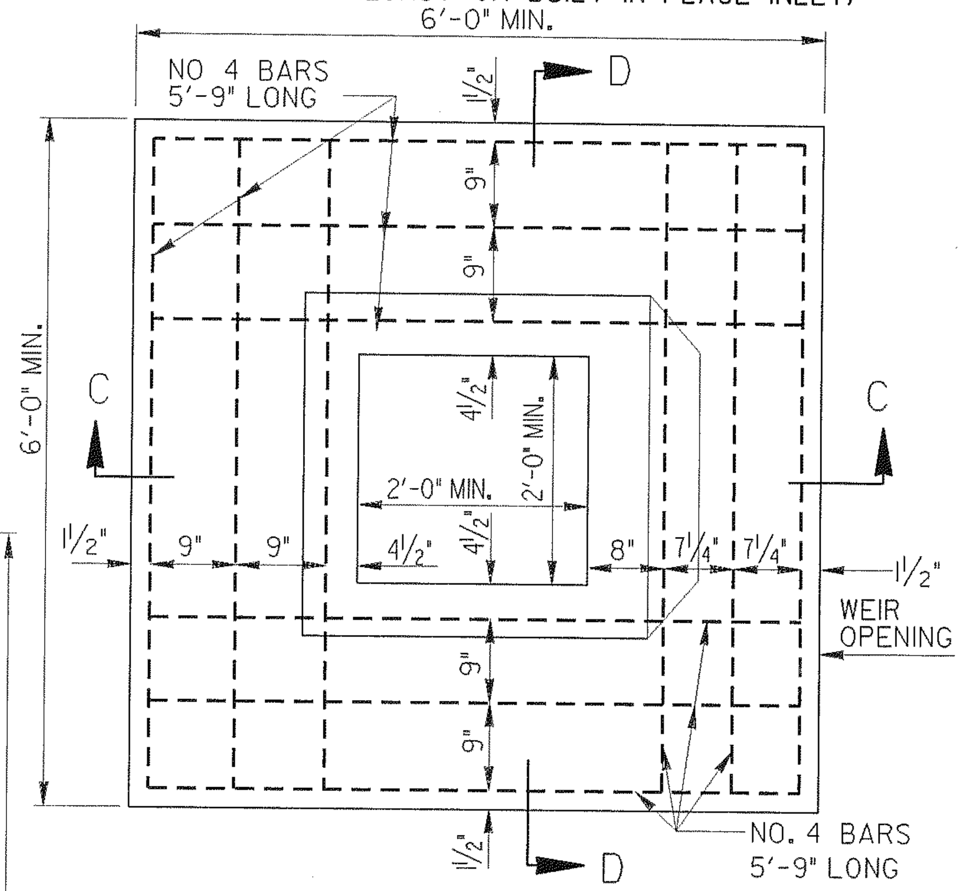

PLAN VIEW

NOTE: 2/2, 6X6 WELDED WIRE FABRIC WITH 2 NO. 4 BARS 5'-9" LONG ON EACH SIDE MAY BE USED AS AN ALTERNATIVE.

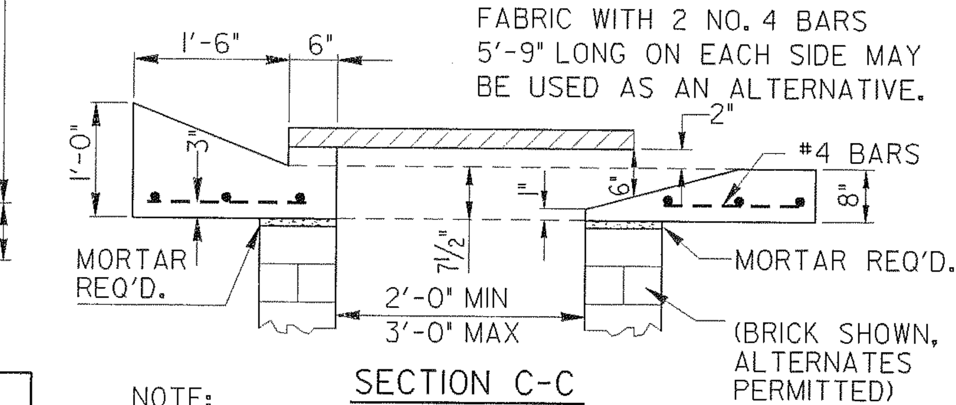

SECTION C-C

NOTE:
WHEN USING PRECAST APRON, THE PLATE, BOLTS & OTHER REQUIREMENTS SHALL CONFORM TO THAT SHOWN FOR THE POURED IN PLACE APRON.

▼ MAXIMUM W OR WI PERMITTED WITH PRECAST APRON WITHOUT REDUCER SLAB.

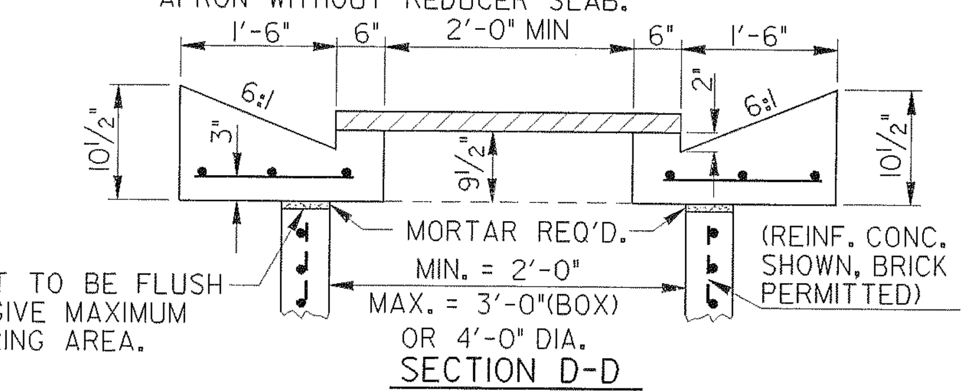

SECTION D-D
SCALE: 3/4" = 1FT.

GENERAL NOTES:

1. SPECIFICATIONS: GA. STANDARD AND/OR SPECIAL PROVISIONS.
2. SEE STD. 9031-L FOR ADDITIONAL DETAILS WHERE INLET IS CONSTRUCTED ON BOX CULVERT.
3. SEE STD. 1040 FOR CIRCULAR PRECAST ALTERNATES.
4. PRECAST ON BRICK MASONARY: BRICK CONSTRUCTION SHALL EXTEND 6" ABOVE TOP OF PIPE. JOINTS BETWEEN PRECAST & BRICK SECTIONS SHALL BE FLUSH OR CONC. FILLED TO GIVE MAX. BEARING AREA.
5. TYPICAL TREATMENT FOR SKEWED PIPES:
   (a) WITH PRECAST APRON - CONSTRUCTION BOX WITH WALLS PERPENDICULAR TO PIPE AND SET PRECAST APRON PARALLEL TO DITCH AND SKEWED RELATIVE TO PIPE OR USE CIRCULAR SECTIONS (STD. 1040)
   (b) WITH BUILT-IN-PLACE APRON - CONSTRUCT BOX AS DESCRIBED IN (a) AND USE REDUCER SLAB OR INCREASE W OR WI DIMENSIONS AS NECESSARY OR USE CIRCULAR SECTIONS (STD. 1040).

TYPICAL DROP INLET DIMENSIONS **

PIPE SIZE	BRICK MASONRY							REINFORCED CONCRETE **			
	MIN. W OR WI	MIN. H	MIN. θ	a (MAX.)	b (MAX.)	MODIFIED MIN. H	MODIFIED MIN. θ	MIN. W OR WI	MIN. H	MIN. θ	a (MAX.)
15"	2'-0"	3'-1"	2'-1"	—	—	2'-7 1/2"	1'-7 1/2"	2'-0"	3'-2"	2'-2"	—
18"	2'-3"	3'-10"	2'-10"	1 1/2"	2 9/16"	2'-11"	1'-11"	2'-3"	3'-5"	2'-5"	—
24"	2'-10"	4'-11"	3'-11"	5"	8 5/8"	3'-6"	2'-6"	3'-0"	4'-10"	3'-10"	6"
30"	3'-5"	6'-0"	5'-0"	8 1/2"	1'-2 11/16"	4'-1"	3'-1"	3'-6"	5'-5"	4'-5"	9"
36"	4'-0"	7'-1"	6'-1"	1'-0"	1'-8 3/4"	—	—	4'-0"	6'-0"	5'-0"	1'-0"
42"	4'-7"	8'-6"	7'-2"	1'-3 1/2"	2'-2 3/4"	—	—	4'-6"	6'-7"	5'-7"	1'-3"
48"	5'-2"	9'-7"	8'-3"	1'-7"	2'-8 7/8"	—	—	5'-0"	7'-2"	6'-2"	1'-6"

* BUILT-IN-PLACE OR PRECAST BOX

** DIMENSIONS ARE BASED UPON TYPICAL OUTSIDE DIAMETERS OF CONCRETE PIPE AND MAY BE VARIED IF CONDITIONS PERMIT, AND THE VARIED DIMENSIONS ARE SHOWN IN THE PLANS OR SPECIFIED BY THE ENGINEER. DIMENSIONS "a" ARE BASED UPON 2'-0" WEIR OPENING. MINIMUM H AND h ARE BASED UPON LARGEST PIPE INVOLVED. BOX ENCLOSURE FOR PIPE DOES NOT HAVE TO BE SQUARE. W AND WI DIMENSIONS MAY DIFFER. (DIMENSIONS HAVE BEEN SPECIFIED FOR BOX SHAPED INLETS. SEE STD. 1040 FOR DIMENSIONS OF CIRCULAR ALTERNATES).

REVISION	DATE
GENERAL REVISION	4-17-96
BY	R.M.U.

DEPARTMENT OF TRANSPORTATION
STATE OF GEORGIA

STANDARD MEDIAN DROP INLET
(PRECAST OR BUILT-IN-PLACE) & CONCRETE APRON

SCALE AS SHOWN — REV. & REDR. AUGUST 26, 1981

DES. 2-67 (SUBMITTED) STATE ROAD & AIRPORT DESIGN ENGR.
REV. R.M.U.
TRA. G.M.E. (APPROVED) STATE HIGHWAY ENGINEER
CHK. R.K.C.

NUMBER 9031S