STATE	PROJECT NUMBER	SHEET NO.	TOTAL SHEETS
GA.	EDS00-0545-00(017)	436	575

SPECIAL DESIGN TYPE "A"

SPECIAL NOTE:
GENERAL USE OF THESE DETAILS WILL BE WHERE FILL EMBANKMENT WARRANTS GUARDRAIL AND PAVED SHOULDER WILL BE ADJACENT TO THE ROADWAY.

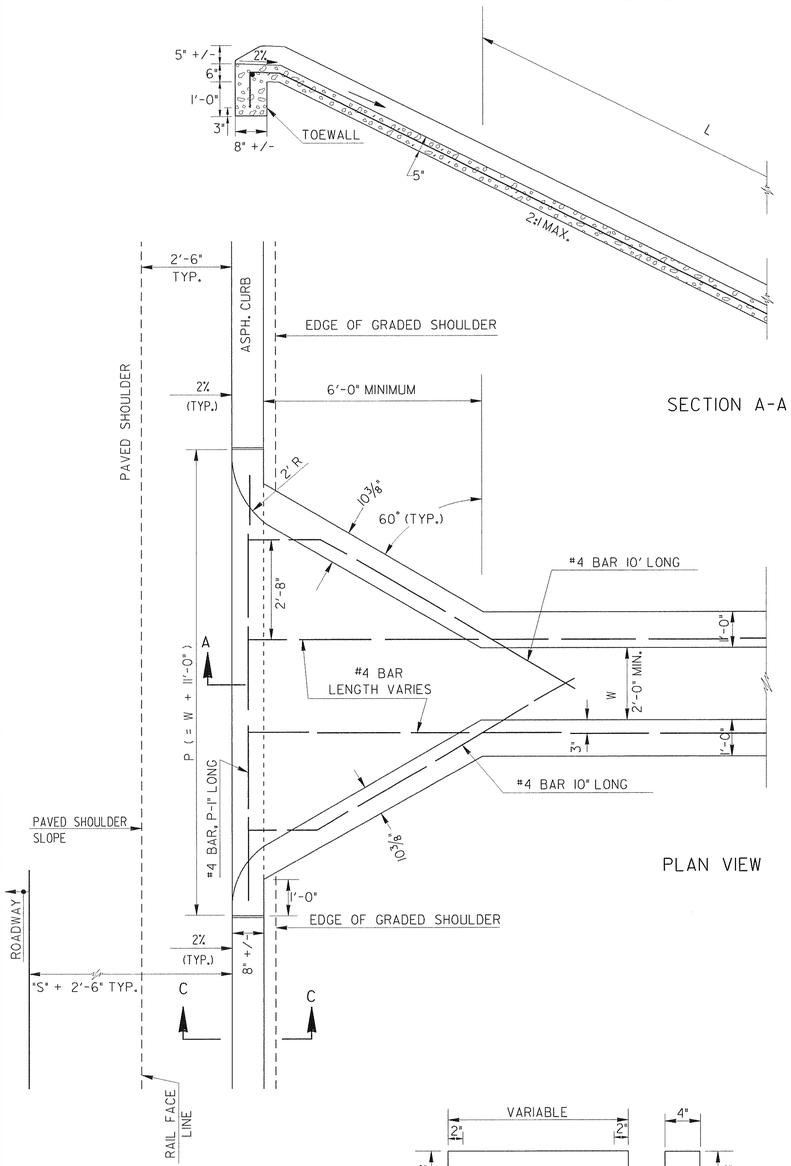

SECTION A-A

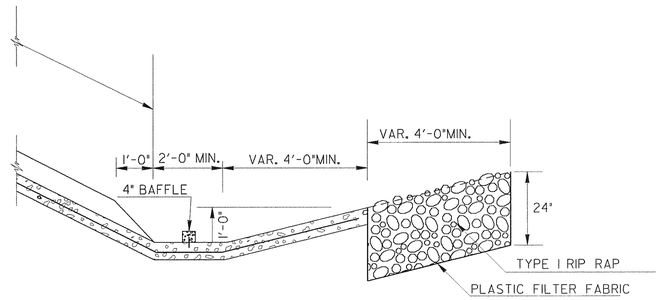

PLAN VIEW

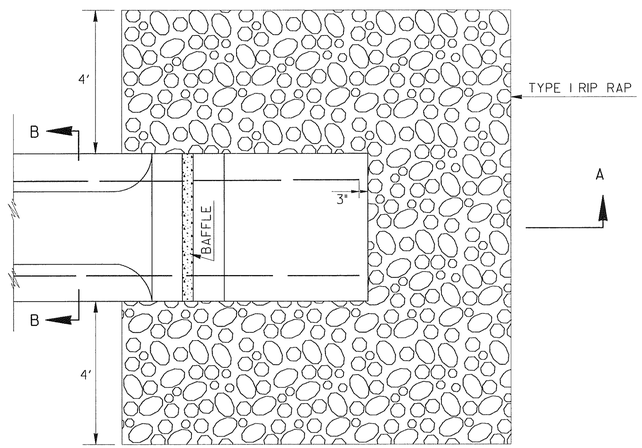

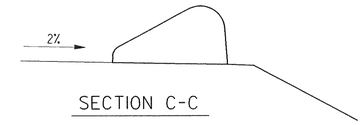

SECTION C-C

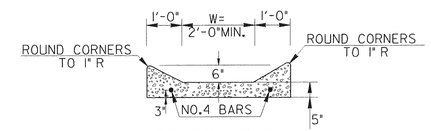

SECTION B-B

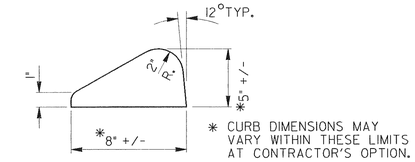

* CURB DIMENSIONS MAY VARY WITHIN THESE LIMITS AT CONTRACTOR'S OPTION.

DETAIL OF ASPHALTIC CONCRETE CURB (TYP.)

"W"	SLOPE	CAPACITY			
		DESIREABLE (HALF FULL)		MAXIMUM 5" DEPTH	
		CU. FT./SEC.	VELOCITY FT./SEC.	CU. FT./SEC.	VELOCITY FT./SEC.
2'-0"	6:1	7.06	13.29	16.32	17.58
2'-0"	4:1	8.65	16.28	19.99	21.53
2'-0"	3:1	9.99	18.80	23.08	24.87
2'-0"	2:1	12.23	23.02	28.27	30.45
4'-0"	6:1	14.51	14.07	33.79	19.11
4'-0"	4:1	17.78	17.24	41.40	23.41
4'-0"	3:1	20.53	19.91	47.40	27.03
4'-0"	2:1	25.14	24.38	58.54	33.11

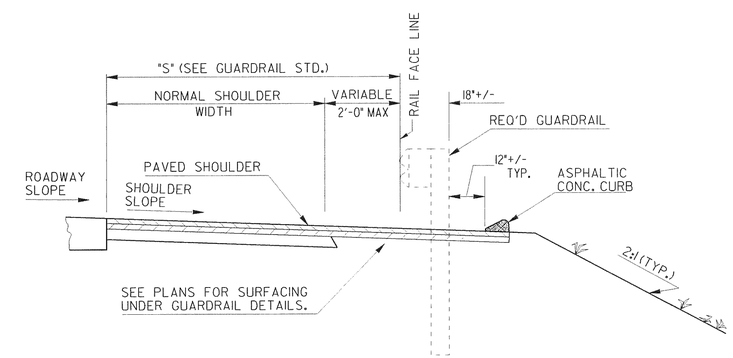

SECTION C-C

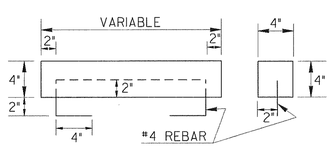

DETAILS OF 4" CONCRETE BAFFLE

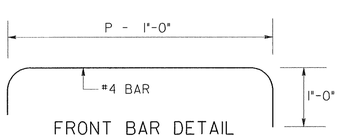

FRONT BAR DETAIL

SPECIAL DESIGN TYPE "A" FLUME QUANTITIES

(FOR W=2'-0") CU. YDS CONCRETE=2.41+0.0926 (L)
(FOR W=4'-0") CU. YDS CONCRETE=2.59 +0.1306 (L)

(FOR EITHER W) LBS. STEEL = 41LBS. +(1.336) (L)
QUANTITIES ABOVE INCLUDES BAFFLE

BAFFLE QUANTITIES

(FOR W=2'-0") CU. YDS CONCRETE=0.0161
(FOR W=4'-0") CU. YDS CONCRETE=0.0242

(FOR W=2'-0") LBS. STEEL=3.335 LBS.
(FOR W=4'-0") LBS. STEEL=4.669 LBS
QUANTITIES FOR BAFFLE ARE SHOWN IF DESIGNER WANT TO REMOVE BAFFLE

GENERAL NOTES:

1. SPECIFICATIONS: GEORGIA STANDARD, CURRENT EDITION, AND SUPPLEMENTS THERETO.
2. SIZE AND DIMENSIONS OF TYPE A FLUMES MAY BE ADJUSTED FOR AN INDIVIDUAL SITE WHERE SHOWN ON THE PLANS OR DIRECTED BY THE ENGINEER.
3. AT LOCATIONS WHERE FLUME OUTLETS INTO AN INLET STRUCTURE, OMIT BAFFLE AND DOWNTURN END AND CONNECT FLUME TO THE INLET STRUCTURE.
4. RIP RAP SHALL BE OMITTED IN PAVED DITCHES OR WHERE OTHER APPROVED EROSION CONTROL MATERIALS ARE USED.
5. POURED IN PLACE CONCRETE SHALL BE CLASS B MINIMUM. CLASS A CONCRETE SHALL BE USED FOR BAFFLES IF PRECAST.
6. SEE DETAIL SHEET "SHOULDER PAVING & SURFACING UNDER GUARDRAIL" FOR REQUIREMENTS FOR TREATMENT UNDER GUARDRAIL.
7. BASIS OF PAYMENT:
   CLASS B CONCRETE --- CU. YDS.
   BAR REINFORCEMENT STEEL ---LB.

REVISION	DATE	BY
REVISED FLUME CAPACITIES	2-28-11	GLO
REVISED QUANTITY NOTES	11-17-09	GLO
REVISED BAR LENGTH	3-4-09	GLO
ADDED CONC. THICKNESS	2-26-09	GLO

DEPARTMENT OF TRANSPORTATION
STATE OF GEORGIA

SPECIAL DESIGN

TYPE A CONCRETE FLUME FOR ASPHALTIC CONCRETE CURB

NO SCALE

FEBURARY 2007

DES. ____
DRW. ____
TRA. ____
CHK. ____