| STATE | PROJECT NUMBER | SHEET NO. | TOTAL SHEETS |
|---|---|---|---|
| GA. | EDS00-0545-00(017) | 431 | 575 |

## FIELD FENCE BARBED WIRE-TYPICAL DETAILS

3 - STRAND

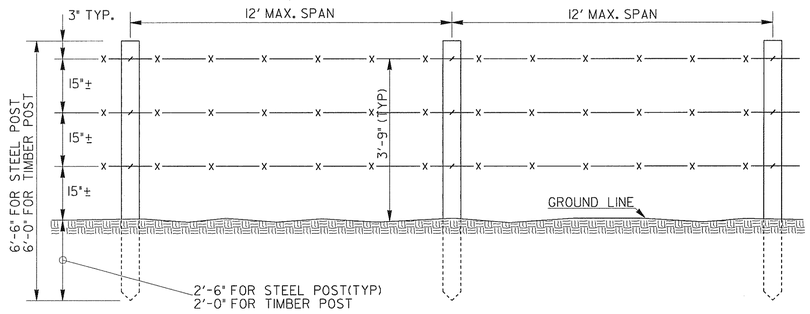


NOTE: 3,4 AND 5 STRAND BARBED WIRE SHOWN.
OTHER COMBINATIONS MAY BE SPECIFIED.

4 - STRAND

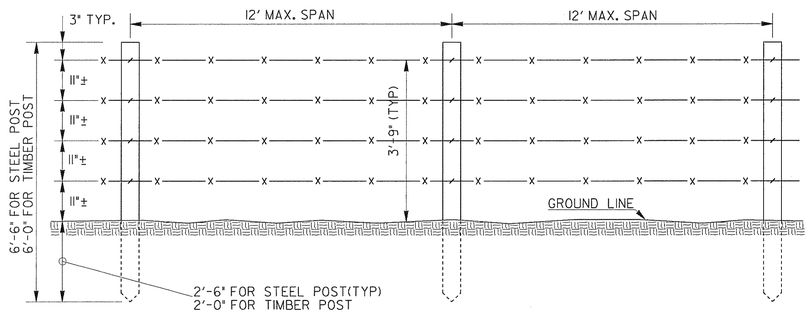


NOTE: WIRE HEIGHTS AND/OR SPACINGS VARIED WHERE SPECIFIED.

5 - STRAND

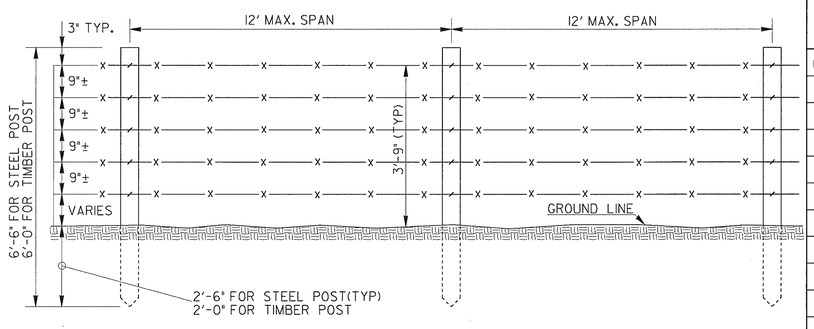


## FIELD FENCE WOVEN WIRE-TYPICAL DETAILS

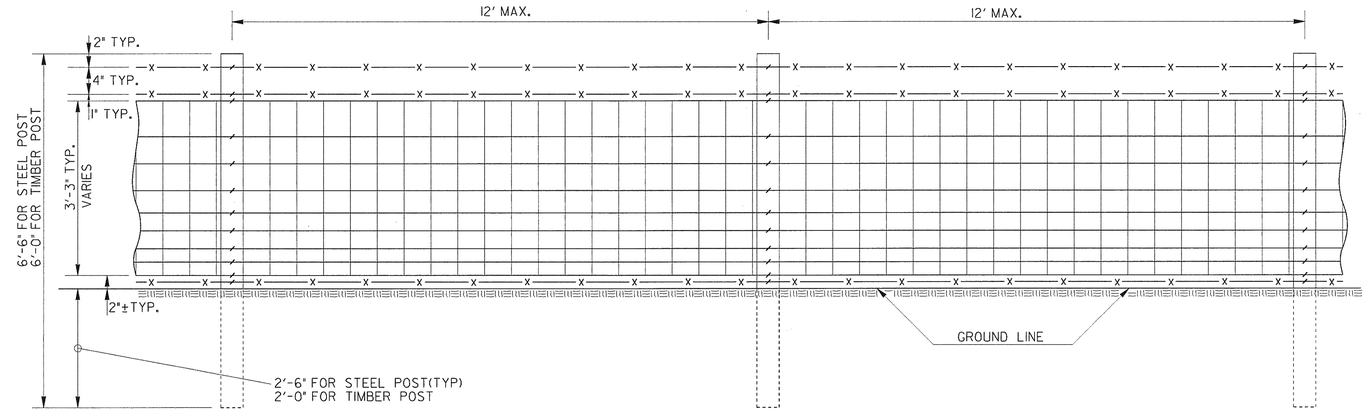


NOTE: BARBED WIRE SHALL BE OMITTED WHERE EXISTING
OR REPLACED FENCE DOES NOT HAVE BARBED WIRE
OR ELSEWHERE WHEN SPECIFIED.

## CORNER POST DETAIL

(ALTERNATE MAY BE APPROVED BY THE ENGINEER)

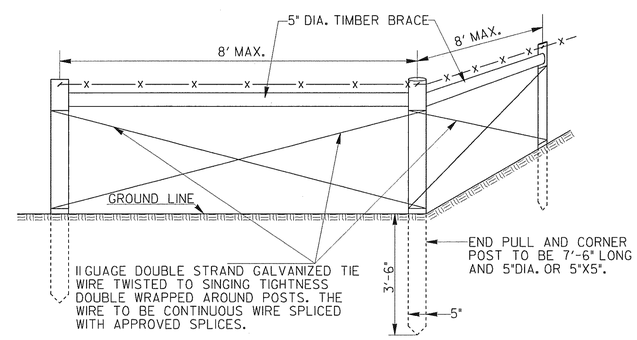


NOTE: BRACING FOR END AND PULL POST SHALL BE THE SAME AS ABOVE.

GENERAL NOTES:

1. FENCE DESIGN NUMBERS (ASTM-A116) ARE DESIGNATED IN THE FILL-OUT BOX TO APPROXIMATE EXISTING OR REPLACE FENCING. ASTM-A116, DESIGN NO. 939-6-12½(ie. 9 HORIZONTAL WIRES, 39" HEIGHT, 6" STAY WIRE SPACING, 12½GAGE WIRE FABRIC) SHALL BE USED WITH 3 STRANDS OR BARBED WIRE WHERE OTHER DESIGNS ARE NOT SPECIFIED.
2. CORNER AND PULL POST SHALL BE TREATED TIMBER 5" DIA. OR NOMINAL 5"X5". LINE POST MAY BE EITHER TREATED TIMBERS 3" DIA. OR NOMINAL 4"X4" OR STEEL. IF STEEL POST ARE USED, THEY WILL BE 1.3± LBS./FT. STUDDED "T" POST, EITHER GALVANIZED OR PAINTED, WITH AN APPROVED ANCHOR PLATE. ( 4"X4½" TYP.)
3. MATERIALS SHALL BE THE KIND THAT CAN BE PURCHASED AT A HARDWARE OR FARM SUPPLY STORE AND SHALL MEET THE APPROVAL OF TE ENGINEER. MATERIALS DO NOT HAVE TO BE INSPECTED OR APPROVED BY D.O.T. OFFICE OF MATERIAL AND RESEARCH, UNLESS THE ENGINEER REQUEST. CONCRETE FOOTING ARE NOT REQUIRED.
4. DETAILS MAY DIFFER FROM THAT SHOWN IN ORDER TO MATCH EXISTING OR REPLACE FIELD FENCING OR WHEN SO SPECIFIED.

| FENCE LOCATION | FIELD FENCE WOVEN WIRE ✳ | | | | | | | | FIELD FENCE BARBED WIRE | LINEAR FT. OF FENCE |
|---|---|---|---|---|---|---|---|---|---|---|
| | FENCE FABRIC ASTM-A116 DESIGN NO. | FENCE FABRIC | | | | | STRANDS OF BARBED WIRE WITH FENCE | | | |
| | | NO. OF HORIZONTAL WIRES | FABRIC HEIGHT (INCHES) | SPACINGS STAY WIRES (INCHES) | WIRE GAGES | | | | NO. OF STRANDS | |
| | | | | | INTERMED. LINE AND STAY WIRES | TOP AND BOTTOM | TOP | BOTTOM | | |
| USI/SR4 | | | | | | | | | | |
| 212+07 TO 214+14 LT | | SEE GENERAL NOTE NO. 1 | | | | | | | | 207 |
| 214+28 TO 214+56 LT | | SEE GENERAL NOTE NO. 1 | | | | | | | | 29 |
| 214+56 TO 216+89 LT | | SEE GENERAL NOTE NO. 1 | | | | | | | | 219 |
| | | | | | | | | | | 176 |
| PENDLETON SPRINGS | | | | | | | | | | |
| 22+13 TO 23+72 RT | | | | | | | | | 3 | 159 |
| 23+72 TO 25+00 RT | | | | | | | | | 3 | 128 |
| | | | | | | | | | | |
| | | | | | | | | | | |
| | | | | | | | | | | |

✳ SEE GENERAL NOTE NO. 1

SPECIAL NOTE:

THESE DETAILS ARE FOR USE IN REPLACEMENT FENCING OUTSIDE THE R/W OR FOR TEMPORARY FENCING (PROVIDED THE MATERIALS ARE NOT REUSED FOR PERMANENT FENCING INSIDE THE R/W.)

| BY | REVISION | DATE |
|---|---|---|
| R.M.U. | REV. POST REQMTS. | 2-8-88 |

DEPARTMENT OF TRANSPORTATION
STATE OF GEORGIA

# CONSTRUCTION DETAILS

TYPICAL DETAILS FOR
FIELD FENCING
(FIELD FENCE WOVEN WIRE
AND
FIELD FENCE BARBED WIRE)

NO SCALE — SEPT. 1983

NUMBER
F-4