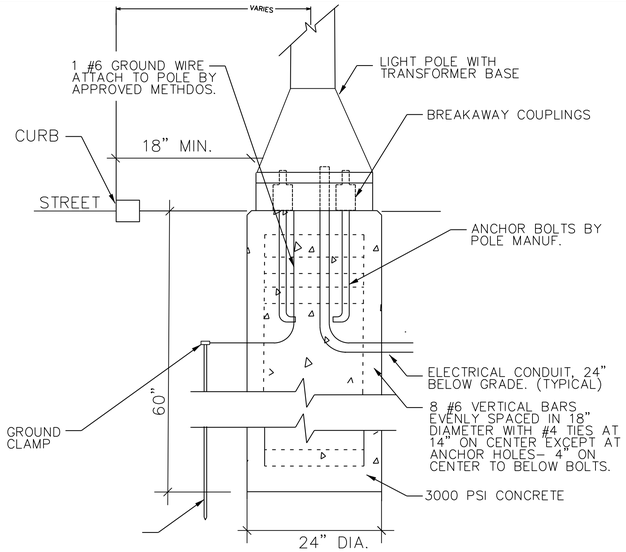

1 TYPICAL POLE FOUNDATION DETAIL

NOT TO SCALE

NOTES:

1. PROVIDE AND INSTALL IN-LINE FUSE FOR EACH PHASE CONDUCTOR FOR THE FIXTURES FUSE AT 15 AMPS. LOCATE IN POLE BASE. RUN #8AWG-CU-THWN CONDUCTORS UP TO LIGHTS. RUN #6AWG-BARE UP IN EACH POLE AND BOND BASE, POLE, AND LUMINAIRE TO GROUND.
2. THE CONTRACTOR SHALL VERIFY THE EXACT DIAMETER OF THE POLE BASE PRIOR TO POURING POLE BASES. ADJUST POLE BASE DIAMETER SUCH THAT POLE BASE IS 3" LARGER IN DIAMETER THAN ACTUAL POLE BASE OR 28" WHICHEVER IS GREATER.
3. REFER TO CIVIL DRAWINGS FOR EXACT LOCATION OF POLES AND EXACT DISTANCE FROM CURB TO CENTERLINE OF POLE.
4. UTILITY OWNER: GEORGIA POWER COMPANY
   ADDRESS: 241 RALPH McGILL BLVD.
   ATLANTA GA, 30308-3374
   CONTACT PERSON: MARK TILDEN
   TELEPHONE NUMBER: (404) 506-4203

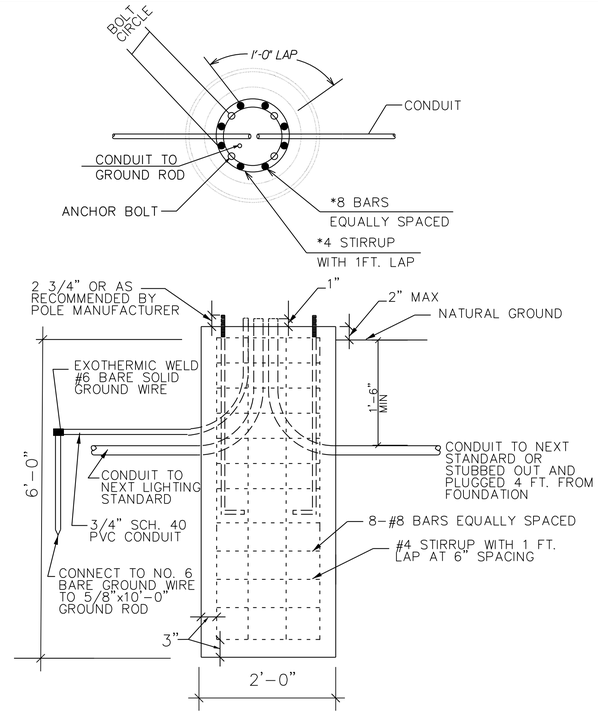

2 FOUNDATION DETAIL FOR GROUND MOUNTED LIGHTING STANDARD

NOT TO SCALE

NOTE: PROVIDE AND INSTALL BREAKAWAY INLINE FUSE HOLDER FOR EACH PHASE CONDUCTOR FOR THE FIXTURE. EACH 2'x6' FOUNDATION REQUIRES: 0.70 CU. YDS. CLASS A CONCRETE AND 164 LBS OF BAR REINFORCING STEEL

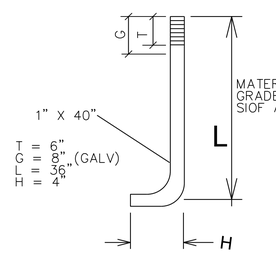

3 ANCHOR BOLT DETAIL

NOT TO SCALE

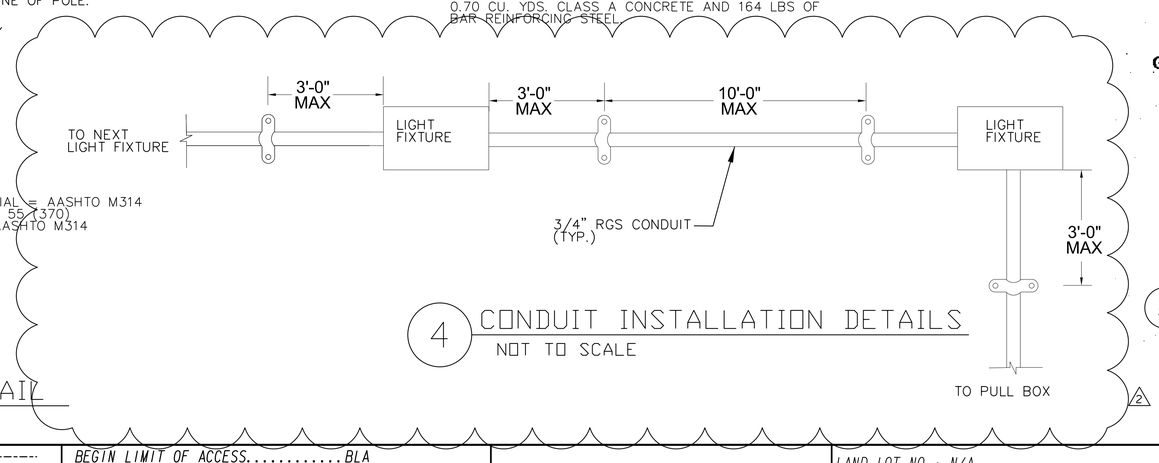

4 CONDUIT INSTALLATION DETAILS

NOT TO SCALE

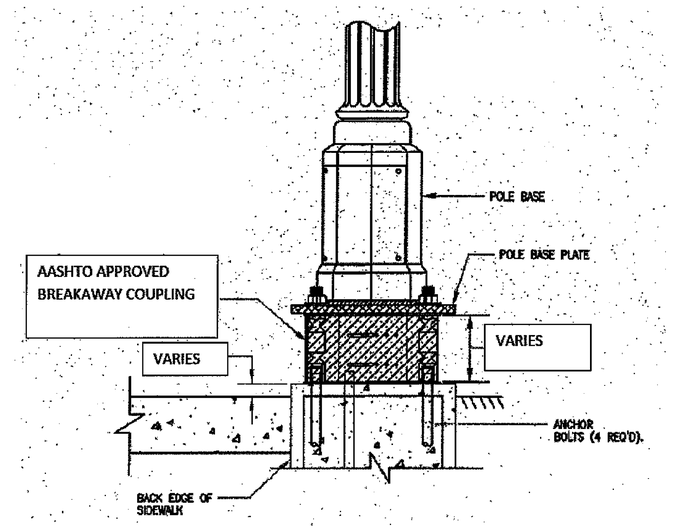

4 TYPICAL BREAKAWAY COUPLING DETAIL

* FOR USE WITH POLES THAT DO NOT SATISFY BREAKAWAY CRITERIA

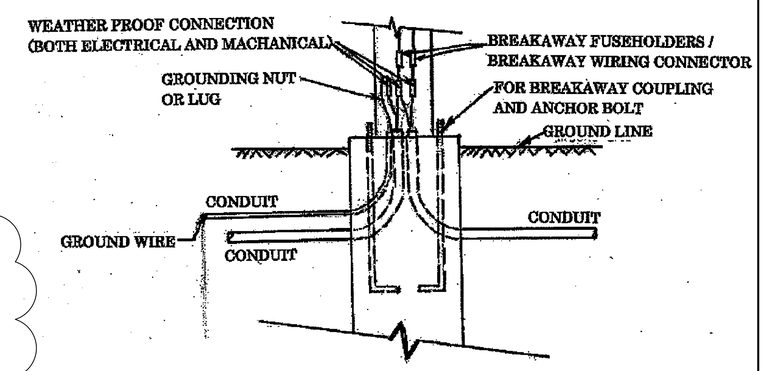

5 TYPICAL WIRING DETAIL WITH BREAKAWAY FUSEHOLDERS OR BREAKAWAY CONNECTOR USED WITH BREAKAWAY BASE

N.T.S.

USE ON CONSTRUCTION

PROPERTY AND EXISTING R/W LINE	
REQUIRED R/W LINE	
CONSTRUCTION LIMITS	C F
EASEMENT FOR CONSTR & MAINTENANCE OF SLOPES & UTILITIES	
EASEMENT FOR CONSTR OF SLOPES	
EASEMENT FOR CONSTR OF DRIVES	
EXISTING R/W LINE	

BEGIN LIMIT OF ACCESS.....BLA
END LIMIT OF ACCESS.....ELA
LIMIT OF ACCESS
R/W AND LIMIT OF ACCESS

ENGINEERING DESIGN TECHNOLOGIES, INC.
1705 ENTERPRISE WAY SUITE 200
MARIETTA GA 30067
PHONE (770) 988-0400 FAX (770) 988-0300

Heath & Lineback Engineers INCORPORATED
2390 CANTON ROAD, BUILDING 200
MARIETTA, GEORGIA 30066-5393

PARSONS
3577 PARKWAY LANE, BUILDING V
SUITE 100, NORCROSS, GA 30092

LAND LOT NO.: N/A
LAND DISTRICT: N/A
GMD: 89

SCALE: N.T.S.

REVISION DATES		
09/18/12		
2	REV	05/15/13

STATE OF GEORGIA
DEPARTMENT OF TRANSPORTATION

OFFICE: DISTRICT 2 DESIGN

LIGHTING PLANS DETAILS

I-520 WIDENING AND INTERCHANGE IMPROVEMENTS

DRAWING No. 25-022

GPLN