STATE	PROJECT NUMBER	SHEET NO.	TOTAL SHEETS
GA.	NH-IM-520-1(15)	34	1321

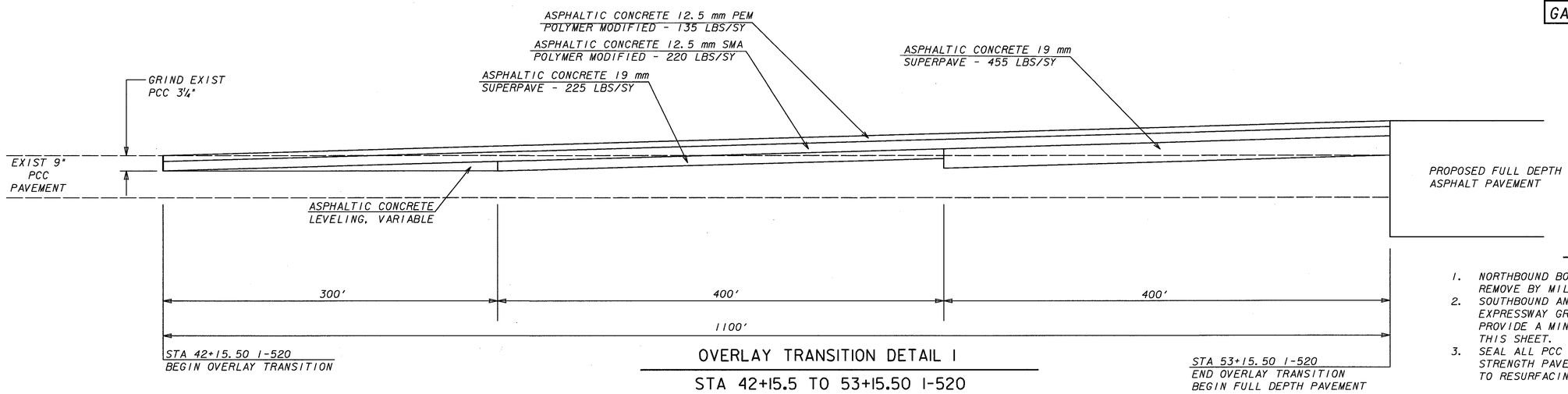

OVERLAY TRANSITION DETAIL 1

STA 42+15.5 TO 53+15.50 I-520

NOTES

1. NORTHBOUND BOBBY JONES EXPRESSWAY (I-520) REMOVE BY MILLING EXISTING ASPHALT OVERLAY.
2. SOUTHBOUND AND NORTHBOUND BOBBY JONES EXPRESSWAY GRIND EXISTING PCC PAVEMENT TO PROVIDE A MINIMUM INLAY OF 3¼". SEE DETAIL THIS SHEET.
3. SEAL ALL PCC JOINTS AND CRACKS WITH A HIGH STRENGTH PAVEMENT REINFORCING FABRIC PRIOR TO RESURFACING WITH ASPHALT.

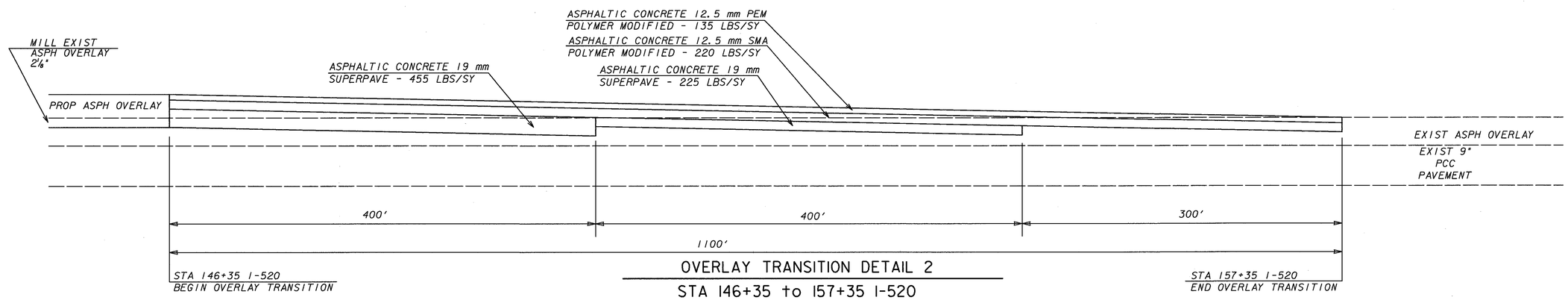

OVERLAY TRANSITION DETAIL 2

STA 146+35 to 157+35 I-520

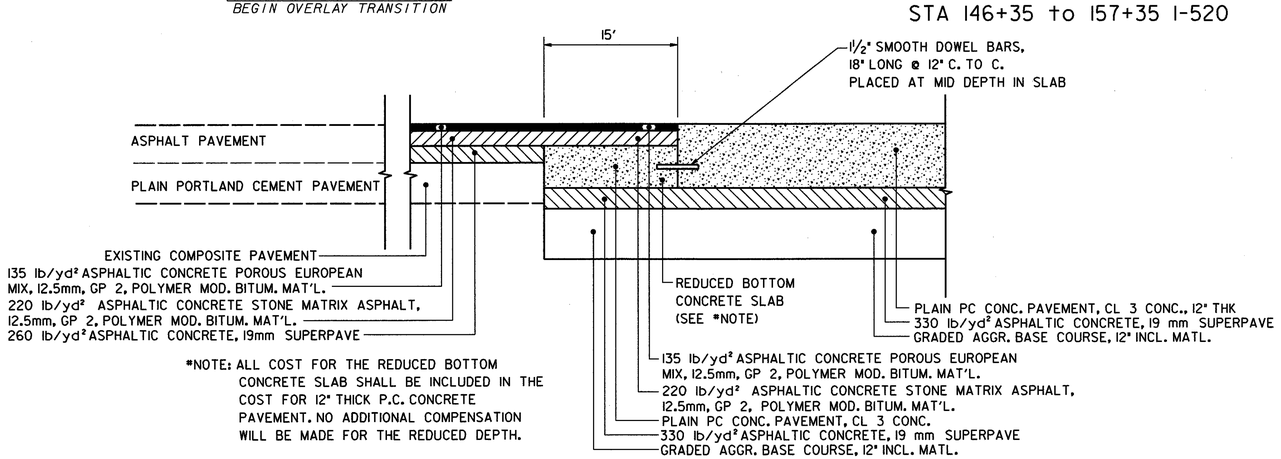

*NOTE: ALL COST FOR THE REDUCED BOTTOM CONCRETE SLAB SHALL BE INCLUDED IN THE COST FOR 12" THICK P.C. CONCRETE PAVEMENT. NO ADDITIONAL COMPENSATION WILL BE MADE FOR THE REDUCED DEPTH.

CONCRETE PAVEMENT TO ASPHALT PAVEMENT TRANSITION DETAIL 3

N.T.S.

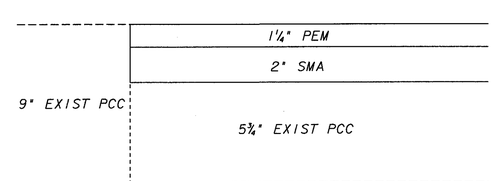

NOTES

- MILL EXISTING ASPHALT OVERLAY AND GRIND PCC PAVEMENT, AS NEEDED, TO PROVIDE A MINIMUM ASPHALT OVERLAY OF 3¼ INCHES
- PLACE HIGH STRENGTH PAVEMENT REINFORCING FABRIC OVER CRACKS AND JOINTS TO INHIBIT REFLECTIVE CRACKING, AS DIRECTED BY THE ENGINEER.
- INLAY 1¼ INCHES OF PEM AND 2 INCHES OF SMA ASPHALT MIXES AT THINNEST POINT OF TRANSITION AREA FOR AN ESTIMATED 300 FEET, OR AS DIRECTED BY THE ENGINEER.
- STEP UP LAYER THICKNESSES IN TRANSITION AREA TO PROPOSED OVERLAY THICKNESS.

DETAIL FOR MINIMUM ASPHALT OVERLAY THICKNESS IN TRANSITION SECTION

NOT TO SCALE

GREENHORNE & O' MARA
G&O PROJECT NO. 0085
2211 NEWMARKET PARKWAY
SUITE 104
MARIETTA, GA. 30067
(770) 988-9555

DATE	REVISIONS	DATE	REVISIONS

GEORGIA
DEPARTMENT OF TRANSPORTATION
TYPICAL SECTIONS
PROJECT: NH-IM-520-1(15)
COUNTY: RICHMOND
DATE:
DRAWING 2-28

9/28/2006 9:52:40 AM \\ATLFS2\JOBS\CIVIL\CADNET\OCF\BATCHdgn et-plotstats jt:trans\0085\PLOT\mass\typicalsections\21045dup-28.prf