STATE	PROJECT NUMBER	SHEET NO.	TOTAL SHEETS
GA.	NH-IM-520-1(15)	33	1321

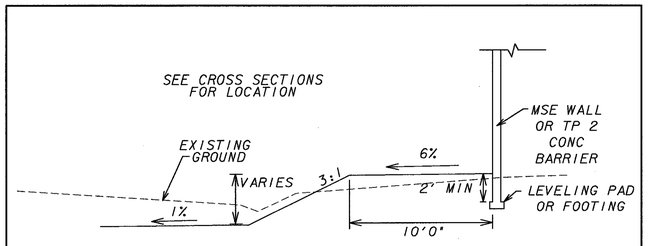

BERM AT POND ALONG WALLS

I-520 STA 60+07 TO 62+40 RT (WALL 1)
RAMP G STA 223+46 TO 227+23 LT (WALL 11)
RAMP H STA 176+77 TO 180+14 RT (WALL 11)

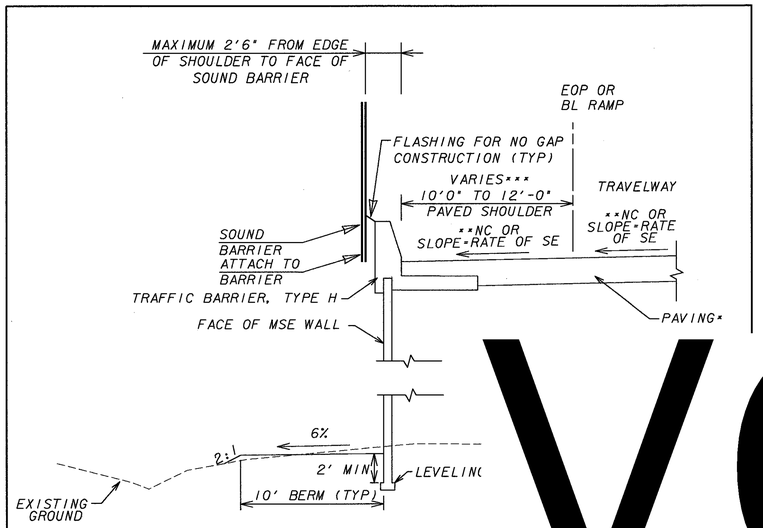

SOUND BARRIER WITH M

RAMP M STA 62+58 TO 63+14 LT
I-520 STA 63+85 TO 66+37 LT (SB 3 & WALL 2)
RAMP A STA 228+98 TO 233+33 RT (SB 3 & WALL 2)

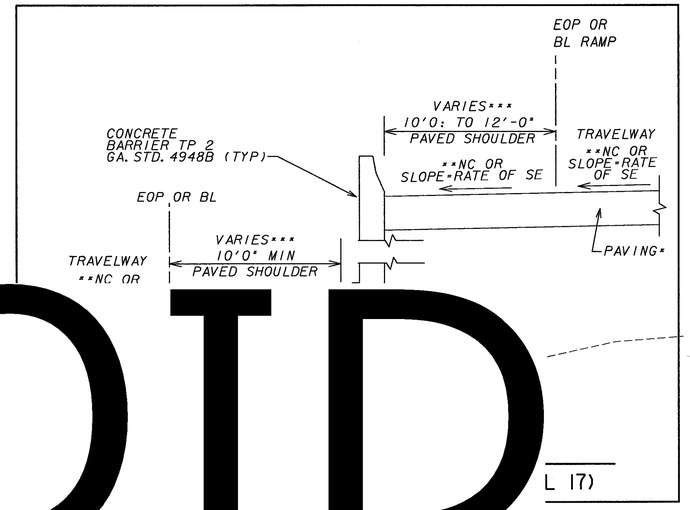

L 17)

VOID

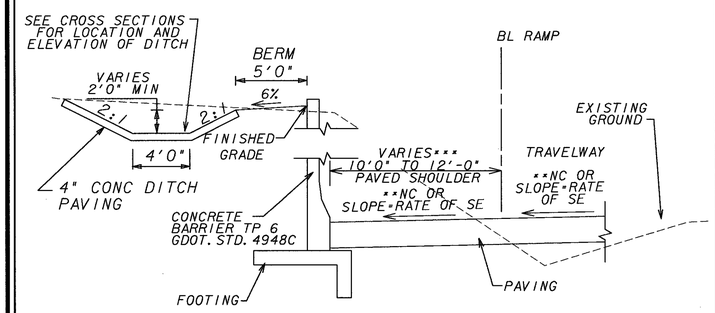

TYPE 6 CONCRETE BARRIER

RAMP R STA 179+93 TO 182+20 RT (WALL 9)
RAMP R STA 190+55 TO 192+67 RT (WALL 9)

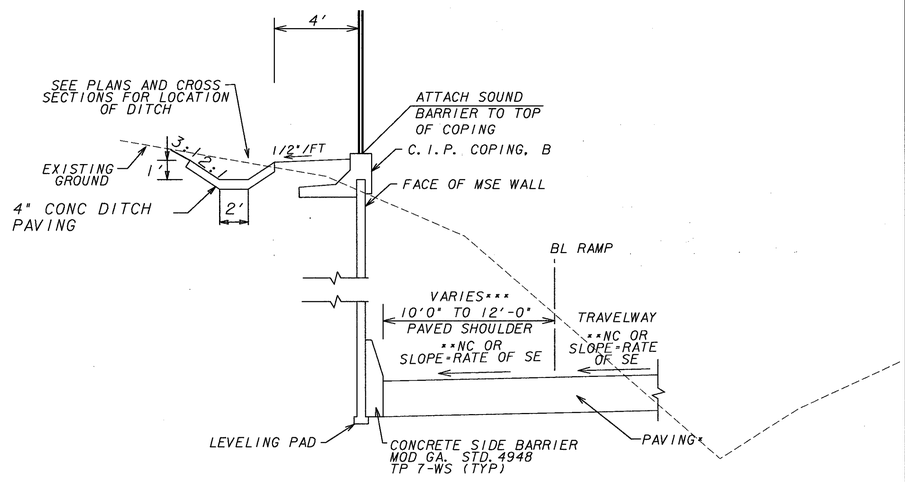

SOUND BARRIER WITH MSE CUT WALL

RAMP A STA 217+31 TO 220+57 RT (SB 3 & WALL 2)
RAMP G STA 214+48 TO 217+31 RT (SB 3 & WALL 2)

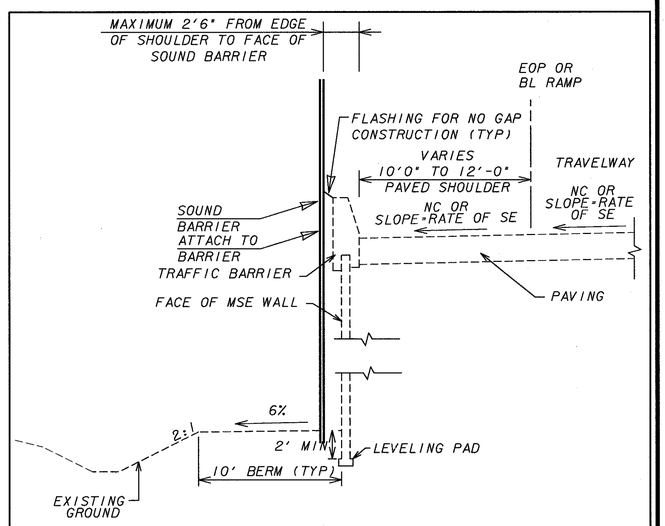

SOUND BARRIER WITH EXISTING MSE WALL

RAMP 1STA 192+49.70 TO 194+22 RT (SB A)

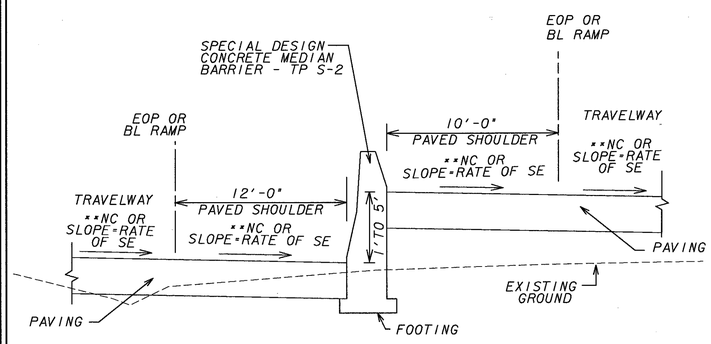

TP 22 CONCRETE BARRIER

RAMP D STA 172+82 TO 174+01 LT (WALL 15)

* SHOULDER PAVEMENT = TRAVELWAY PAVEMENT
** SEE CONSTRUCTION PLANS FOR SE RATES
*** SEE PLANS FOR LOCATION

NOT TO SCALE

GREENHORNE & O' MARA
G&O PROJECT NO. 0085
2211 NEWMARKET PARKWAY
SUITE 104
MARIETTA, GA. 30067
(770) 988-9555

DATE	REVISIONS	DATE	REVISIONS

GEORGIA
DEPARTMENT OF TRANSPORTATION
TYPICAL SECTIONS
PROJECT: NH-IM-520-1(15)
COUNTY: RICHMOND
DATE:
DRAWING 2-27

9/20/2006 8:25:15 AM \\ATLFS2\JOBS\CIVIL\CADNET\DCF\BATCH.dcf atl-plotstats jt\Trans\0085\PLOT\misc\typicalsections\210450typ-27.prf