STATE	PROJECT NUMBER	SHEET NO.	TOTAL SHEETS
GA.	NH-IM-520-1(15)	31	1321

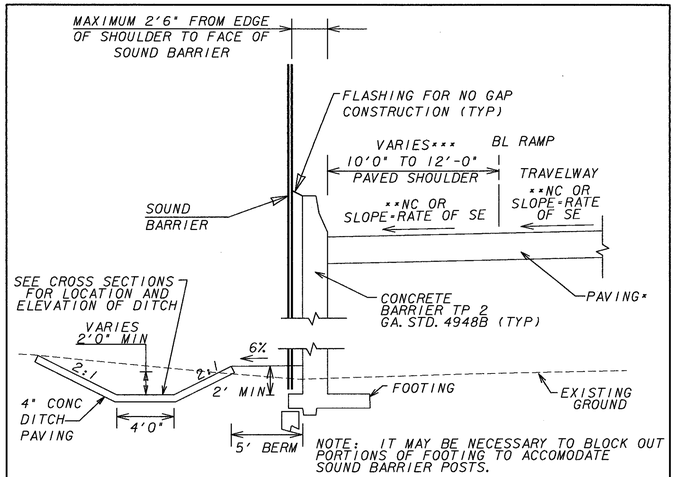

SOUND BARRIER WITH TYPE 2 CONC. BARRIER

RAMP A STA 228+64 TO 228+98 RT (SB 3 & WALL 2)
RAMP A STA 221+12 TO 225+47 RT (SB 3 & WALL 2)
RAMP R STA 183+15 TO 186+23 RT (SB 18 & WALL 9)
RAMP I STA 192+36.70 TO 192+49.70 RT (SB A)

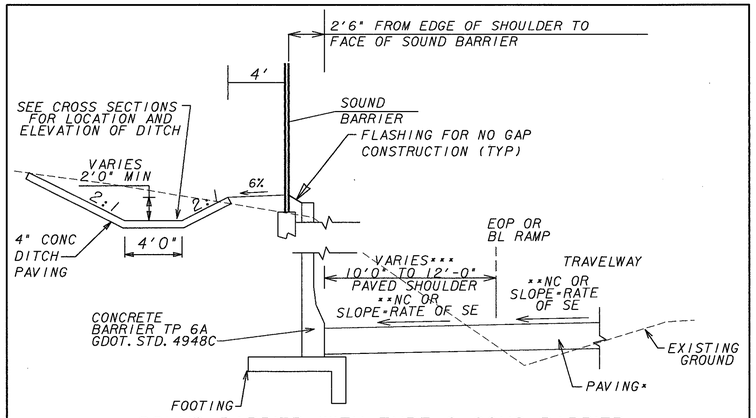

SOUND BARRIER WITH TYPE 6 CONC. BARRIER

RAMP R STA 182+20 TO 183+15 RT (SB 18 & WALL 9)

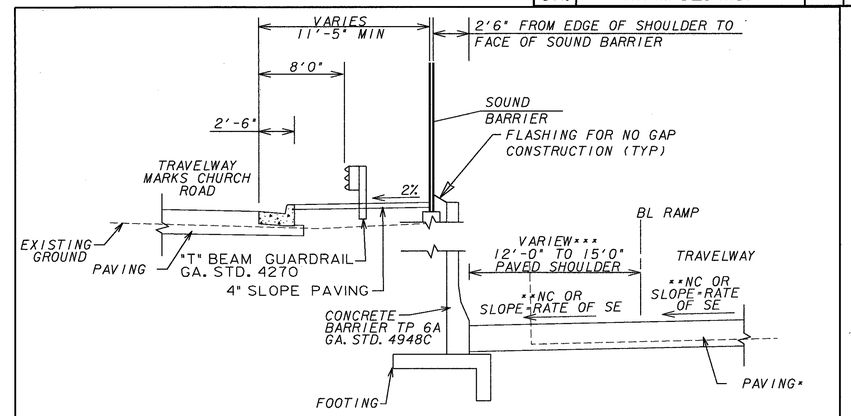

SOUND BARRIER AT RAMP O & MARKS CHURCH

RAMP O STA 28+14 TO 38+70 (SB 17 ALONG WALL 18)

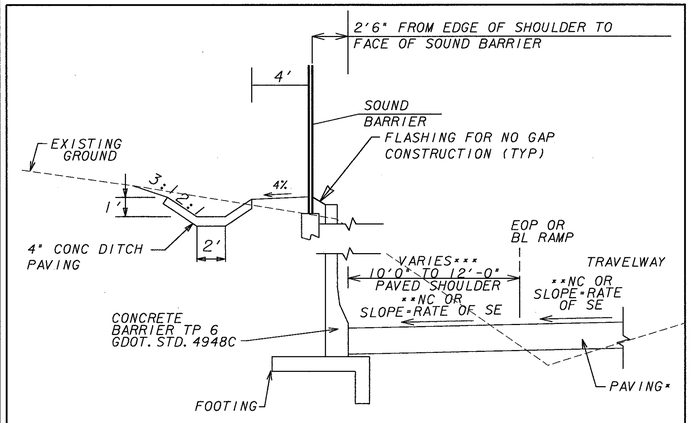

SOUND BARRIER WITH TYPE 6 CONC. BARRIER

RAMP A STA 225+47 TO 228+64 RT (SB 3 & WALL 2)
RAMP A STA 220+57 TO 221+12 RT (SB 3 & WALL 2)
RAMP R STA 186+23 TO 190+55 RT (SB 18 & WALL 9)

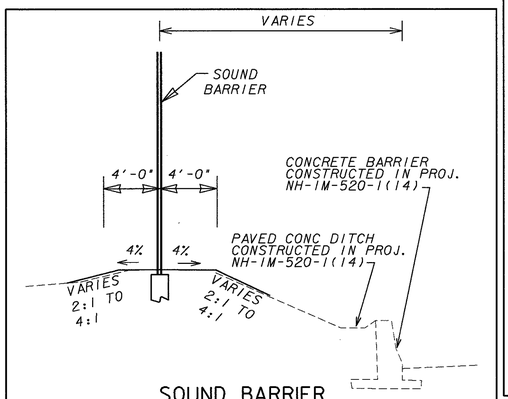

SOUND BARRIER

RAMP O STA 23+42 TP 27+07 RT (SB 17)
I-520 STA 142+70 TO 148+30 LT (SB 17)

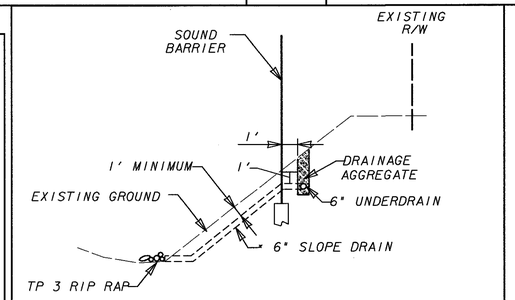

SOUND BARRIER

RAMP I STA 183+20 TO 192+22 RT (SB A)
RAMP I STA 194+22 TO 199+71 RT (SB A)

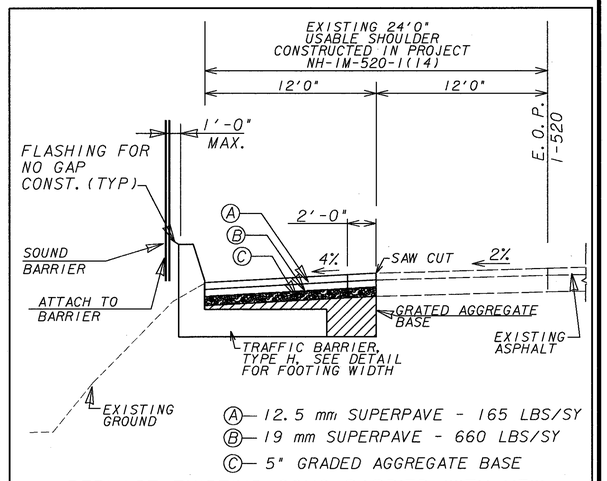

REPLACE EXISTING CONC. BARRIER WITH NEW SPECIAL DESIGN TYPE H CONC. BARRIER

I-520 STA 152+00 TO 153+00 LT (SB 17)

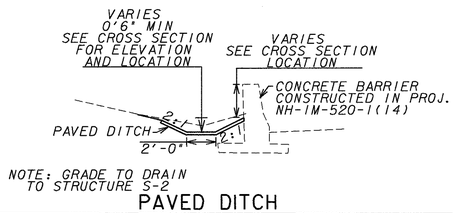

PAVED DITCH

I-520 STA 146+70 TO 148+20 LT (SB 17)

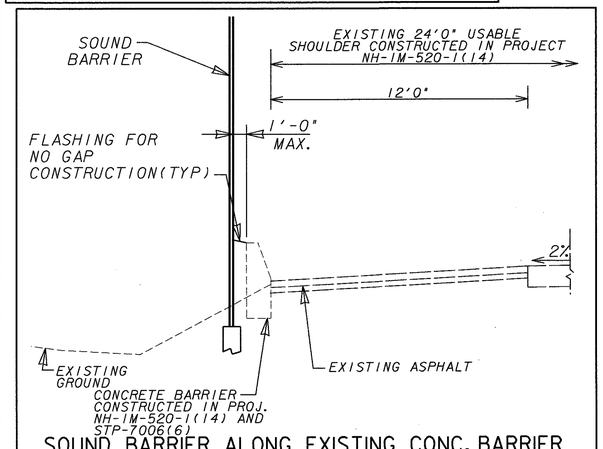

SOUND BARRIER ALONG EXISTING CONC. BARRIER

I-520 STA 148+30 TO 152+00 LT (SB 17)
RAMP I STA 180+69 TO 183+20 RT (SB A)

* SHOULDER PAVEMENT = TRAVELWAY PATH
** SEE CONSTRUCTION PLANS FOR SE RATES
*** SEE PLANS

NOT TO SCALE

GREENHORNE & O' MARA
G&O PROJECT NO. 0085
2211 NEWMARKET PARKWAY
SUITE 104
MARIETTA, GA. 30067
(770) 988-9555

DATE	REVISIONS	DATE	REVISIONS
11-17-06	REV'D FT/FT TO PERCENT		
01-26-07	REV'D SHLDR SLOPE DETAIL		

GEORGIA
DEPARTMENT OF TRANSPORTATION
TYPICAL SECTIONS
PROJECT: NH-IM-520-1(15)
COUNTY: RICHMOND
DATE:
DRAWING 2-25

1/24/2007 6:11:41 PM \\ATLFS2\J085\CIVIL\CADNET\OCF\BATCH.dgn pltplotsets jtrans\0085\PLOT\misc\typicalsections\210450typ-25.pmf