STATE	PROJECT NUMBER	SHEET NO.	TOTAL SHEETS
GA.	NH-IM-520-1(15)	26	(32)

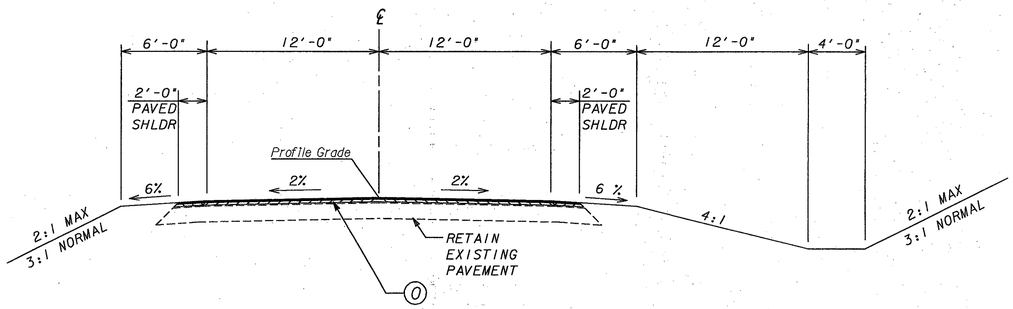

PERIMETER PARKWAY
TANGENT
STA 94+58 TO 96+58

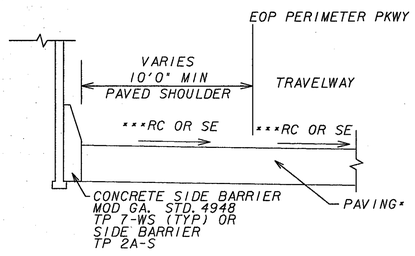

PERIMETER PARKWAY
STA 103+10.10 TO 115+14.87 LT

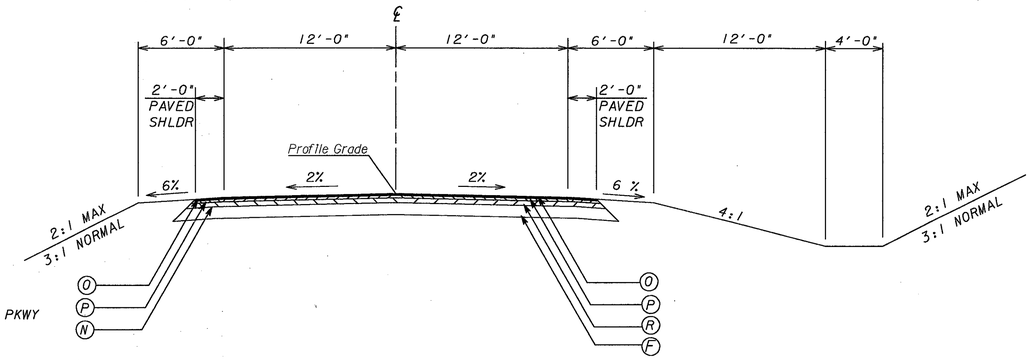

PERIMETER PARKWAY
TANGENT
STA 120+08 TO 120+45

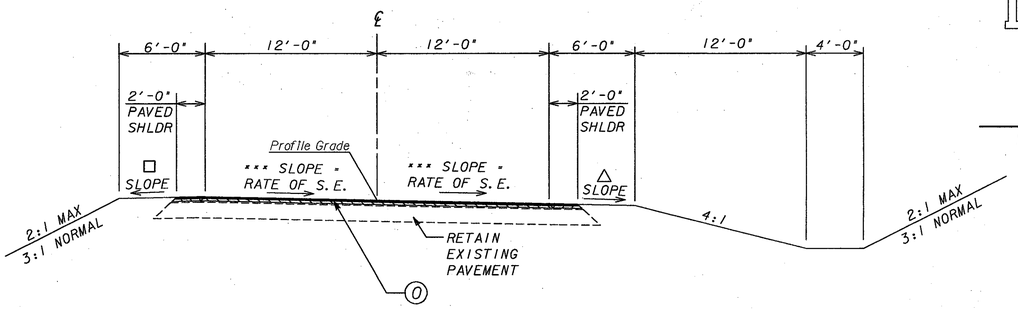

PERIMETER PARKWAY
SUPERELEVATED
STA 96+58 TO 98+00

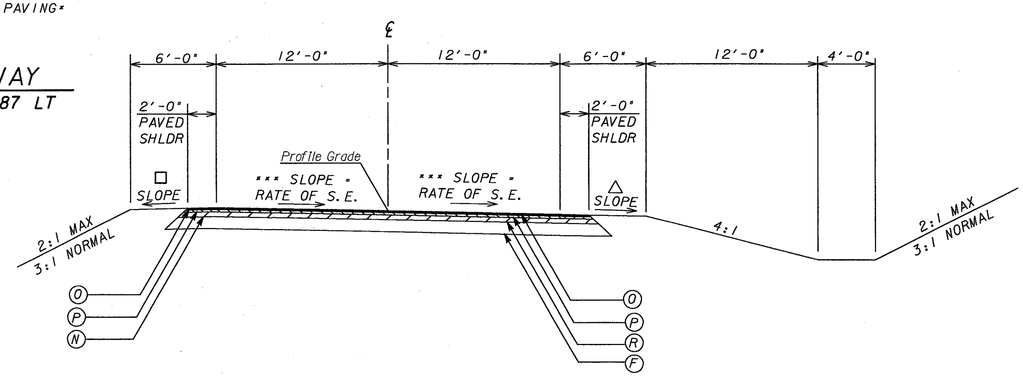

PERIMETER PARKWAY
SUPERELEVATED
STA 98+00 TO 120+08

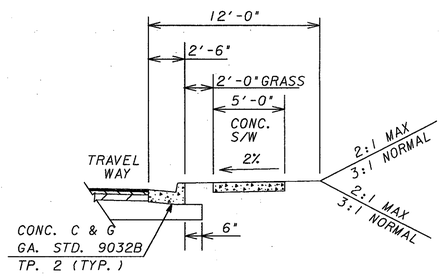

DETAIL OF CURB AND GUTTER
STA 105+50 TO 120+45 RT

*** SEE CONSTRUCTION PLANS FOR SE RATES

△ SLOPE 6% OR RATE OF S.E. WHICHEVER IS GREATER

□ SLOPE AS FOLLOWS:

S.E. RATE OF 0.02ft/ft OR LESS USE 0.06ft/ft
S.E. RATE OF 0.03ft/ft USE 0.05ft/ft
S.E. RATE OF 0.04ft/ft, USE 0.04ft/ft
S.E. RATE OF 0.05ft/ft, USE 0.03ft/ft
S.E. RATE OF 0.06ft/ft, USE 0.02ft/ft
S.E. RATE OF 0.07ft/ft, USE +0.01ft/ft

ALGEBRAIC DIFFERENCE IN PAVING AND SHOULDER SLOPES NOT TO EXCEED 0.08ft/ft

SLOPE CONTROLS			
SLOPE	CUT	FILL	
4:1	0-6'	0-10'	
3:1	OVER 6'	OVER 10'	**
*2:1	OVER 10'	OVER 10'	**

*SEE CROSS SECTIONS FOR LOCATIONS. 2:1 SLOPES REQUIRE SLOPE STABILIZATION.
**REQUIRES GUARDRAIL

REQUIRED PAVEMENT

Ⓕ GRADED AGGREGATE BASE - 12"
Ⓝ GRADED AGGREGATE BASE - 9"
Ⓞ ASPHALTIC CONCRETE 12.5 mm SUPERPAVE - 165 LBS/SY
Ⓟ ASPHALTIC CONCRETE 19 mm SUPERPAVE - 220 LBS/SY
Ⓡ ASPHALTIC CONCRETE 25 mm SUPERPAVE - 330 LBS/SY

NOT TO SCALE

GREENHORNE & O'MARA
G&O PROJECT NO. 0085
2211 NEWMARKET PARKWAY
SUITE 104
MARIETTA, GA. 30067
(770) 988-9555

DATE	REVISIONS	DATE	REVISIONS
11-17-06	GENERAL REVISIONS		

GEORGIA
DEPARTMENT OF TRANSPORTATION
TYPICAL SECTIONS
PROJECT: NH-IM-520-1(15)
COUNTY: RICHMOND
DATE:
DRAWING 2-20

10/27/2006 11:16:32 AM \\ATLFS2\JOBS\CIVIL\CADNET\GCF\BATCHdgf et-plotstate JA\Trans\0085\PLOT\mise\bplotelsections\210450up-20.prf