STATE	PROJECT NUMBER	SHEET NO.	TOTAL SHEETS
GA.	NH-IM-520-1(15)	25	1321

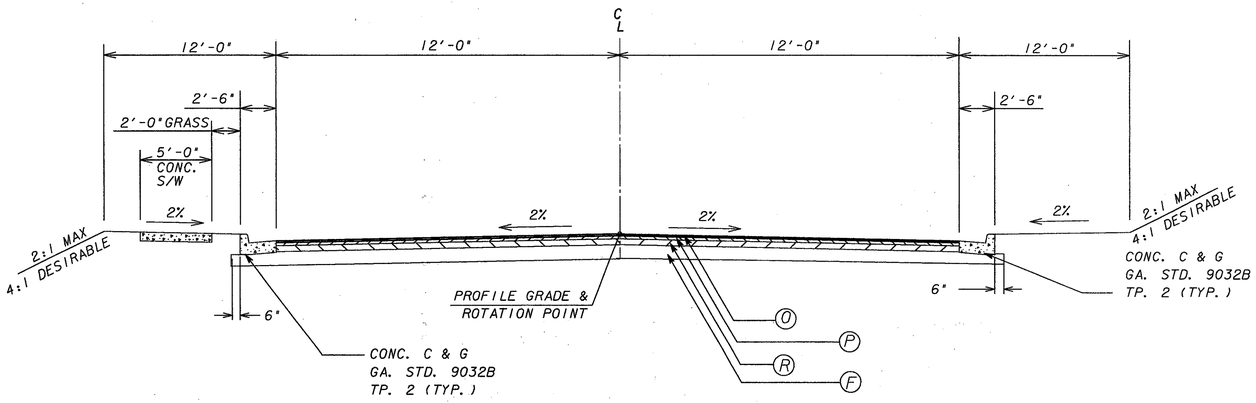

MARKS CHURCH RD

TANGENT
STA 120+37 TO 127+02

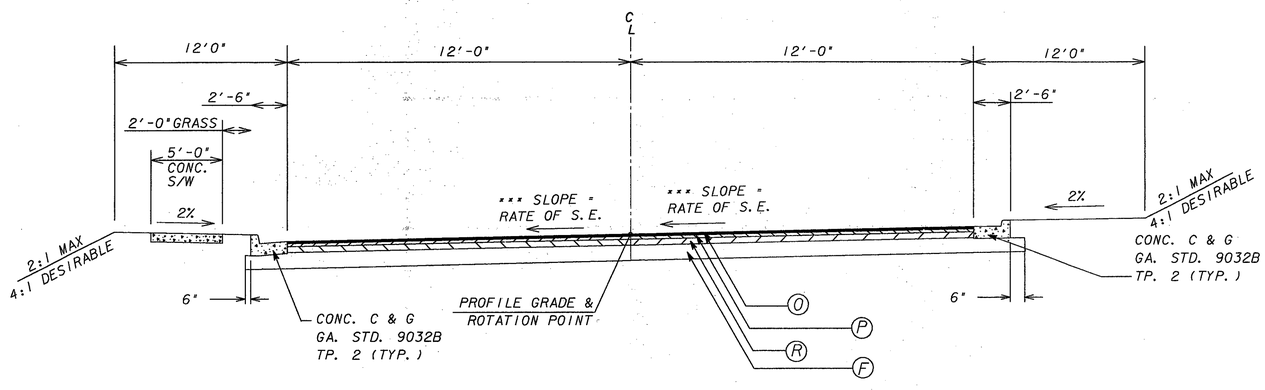

MARKS CHURCH RD

SUPERELEVATED
STA 111+25 TO 120+37
STA 127+02 TO 134+25

NOTE:
STA 128+75 TO 129+75 LEFT.
DO NOT GRUB THIS AREA.
PLACE GRANULAR FILL FROM SLOPE TIE TO BACK OF CURB.
DO NOT COMPACT THE GRANULAR FILL.

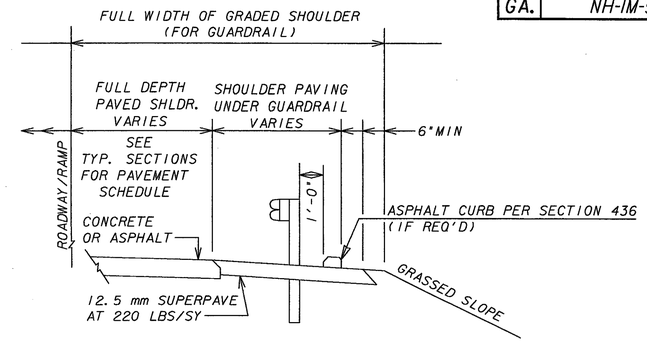

TYPICAL DETAIL FOR SHOULDER PAVING UNDER GUARDRAIL

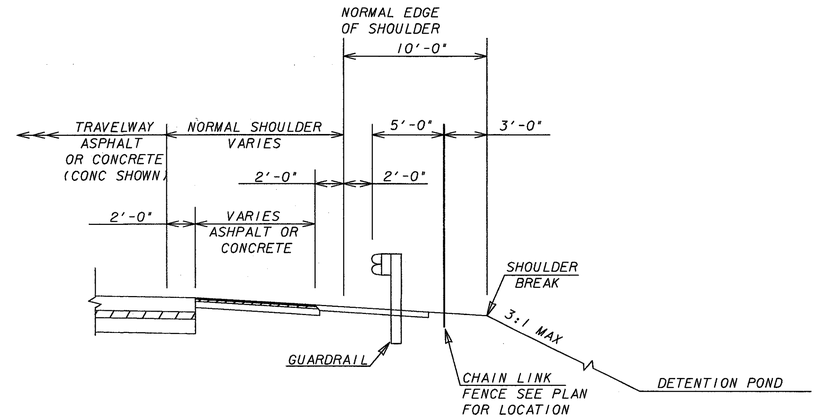

TYPICAL DETAIL FOR SHOULDER AT DETENTION PONDS

SLOPE CONTROLS		
SLOPE	CUT	FILL
4:1	0-6'	0-10'
3:1	OVER 6'	OVER 10' **
*2:1	OVER 10'	OVER 10' **

*SEE CROSS SECTIONS FOR LOCATIONS. 2:1 SLOPES REQUIRE SLOPE STABILIZATION.
**REQUIRES GUARDRAIL

*** SEE CONSTRUCTION PLANS FOR SE RATES
△ SLOPE 6% OR RATE OF S.E. WHICHEVER IS GREATER

□ SLOPE AS FOLLOWS:
S.E. RATE OF 0.02ft/ft OR LESS USE 0.06ft/ft
S.E. RATE OF 0.03ft/ft USE 0.05ft/ft
S.E. RATE OF 0.04ft/ft, USE 0.04ft/ft
S.E. RATE OF 0.05ft/ft, USE 0.03ft/ft
S.E. RATE OF 0.06ft/ft, USE 0.02ft/ft
S.E. RATE OF 0.07ft/ft, USE +0.01ft/ft

ALGEBRAIC DIFFERENCE IN PAVING AND SHOULDER SLOPES NOT TO EXCEED 0.08ft/ft

REQUIRED PAVEMENT
(F) GRADED AGGREGATE BASE - 12"
(O) ASPHALTIC CONCRETE 12.5 mm SUPERPAVE - 165 LBS/SY
(P) ASPHALTIC CONCRETE 19 mm SUPERPAVE - 220 LBS/SY
(R) ASPHALTIC CONCRETE 25 mm SUPERPAVE - 330 LBS/SY

NOT TO SCALE

GREENHORNE & O' MARA
G&O PROJECT NO. 0085
2211 NEWMARKET PARKWAY
SUITE 104
MARIETTA, GA. 30067
(770) 988-9555

DATE	REVISIONS	DATE	REVISIONS
11-17-06	GENERAL REVISIONS		

GEORGIA
DEPARTMENT OF TRANSPORTATION
TYPICAL SECTIONS
PROJECT: NH-IM-520-1(15)
COUNTY: RICHMOND
DATE:
DRAWING 2-19

10/27/2006 11:16:32 AM \\ATLFS2\JOBS\CIVIL\CADNET\OCF\BATCH.dgn gst-plotstats jt\Trans\0085\PLOT\misc\typicalsections\210450up-19.pmf