STATE	PROJECT NUMBER	SHEET NO.	TOTAL SHEETS
GA.	NH-IM-520-1(15)	21	1321

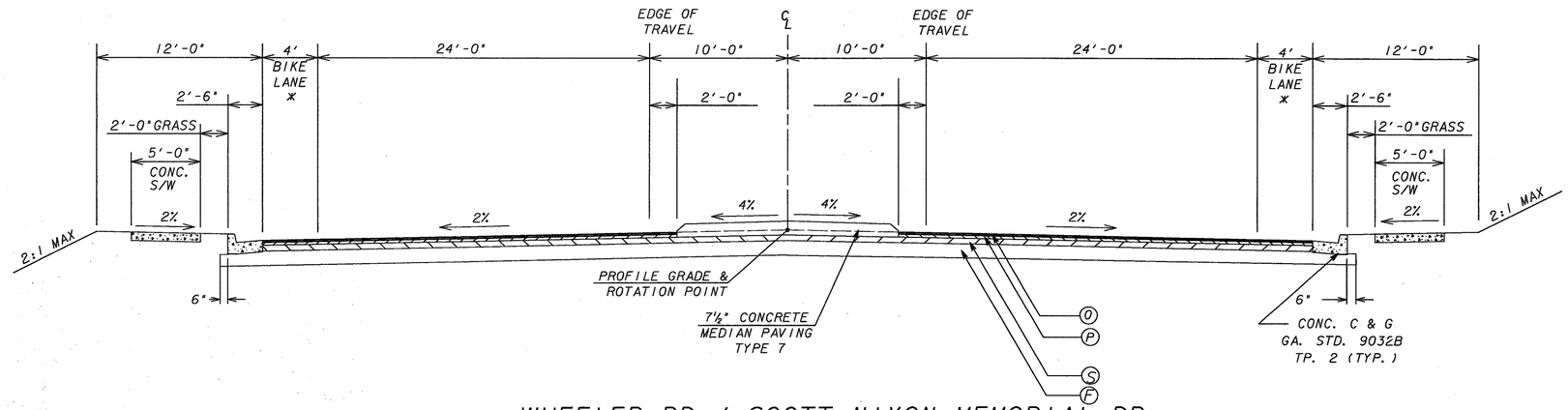

WHEELER RD. / SCOTT NIXON MEMORIAL DR.

TANGENT
SCOTT NIXON- STA 21+85 TO 30+05
WHEELER RD- STA 16+50 TO 20+37
WHEELER RD- STA 23+64 TO 23+81
WHEELER RD- STA 31+94 TO 32+87

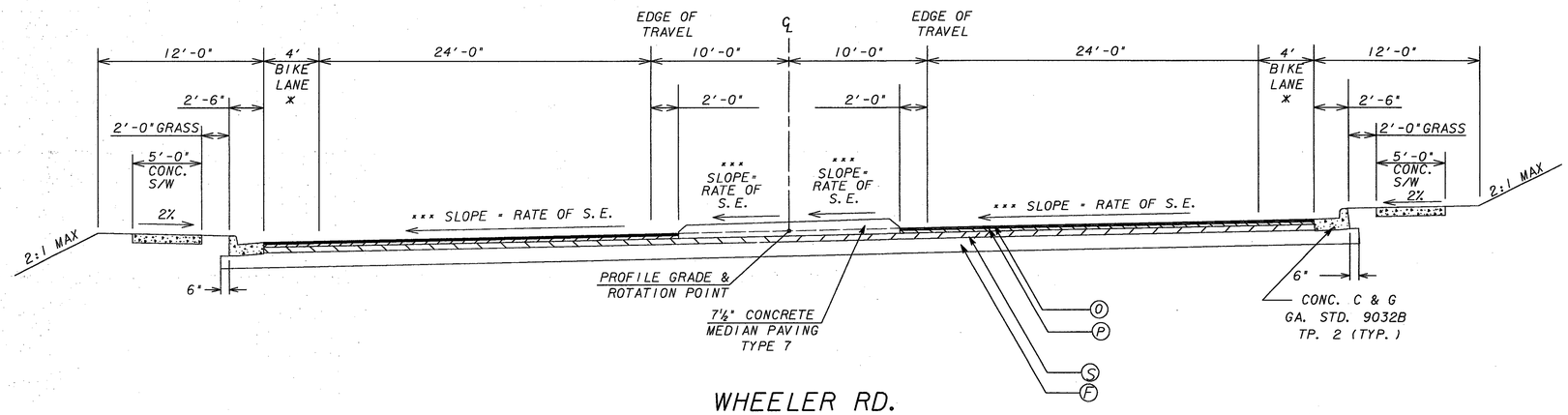

WHEELER RD.

SUPERELEVATED
STA 7+50 TO 16+50
STA 23+81 TO 31+94

SLOPE CONTROLS		
SLOPE	CUT	FILL
4:1	0-6'	0-10'
3:1	OVER 6'	OVER 10'**
*2:1	OVER 10'	OVER 10'**

*SEE CROSS SECTIONS FOR LOCATIONS. 2:1 SLOPES REQUIRE SLOPE STABILIZATION.
**REQUIRES GUARDRAIL

* BIKE LANES ON WHEELER ROAD, BUT NOT ON SCOTT NIXON

*** SEE CONSTRUCTION PLANS FOR SE RATES

△ SLOPE 6% OR RATE OF S.E. WHICHEVER IS GREATER

□ SLOPE AS FOLLOWS:
S.E. RATE OF 0.02ft/ft OR LESS USE 0.06ft/ft
S.E. RATE OF 0.03ft/ft USE 0.05ft/ft
S.E. RATE OF 0.04ft/ft, USE 0.04ft/ft
S.E. RATE OF 0.05ft/ft, USE 0.03ft/ft
S.E. RATE OF 0.06ft/ft, USE 0.02ft/ft
S.E. RATE OF 0.07ft/ft, USE +0.01ft/ft

ALGEBRAIC DIFFERENCE IN PAVING AND SHOULDER SLOPES NOT TO EXCEED 0.08ft/ft

REQUIRED PAVEMENT
(F) GRADED AGGREGATE BASE - 12"
(O) ASPHALTIC CONCRETE 12.5 mm SUPERPAVE - 165 LBS/SY
(P) ASPHALTIC CONCRETE 19 mm SUPERPAVE - 220 LBS/SY
(R) ASPHALTIC CONCRETE 25 mm SUPERPAVE - 330 LBS/SY
(S) ASPHALTIC CONCRETE 25 mm SUPERPAVE - 440 LBS/SY

NOT TO SCALE

GREENHORNE & O' MARA
G&O PROJECT NO. 0085
2211 NEWMARKET PARKWAY
SUITE 104
MARIETTA, GA. 30067
(770) 988-9555

DATE	REVISIONS	DATE	REVISIONS
11-17-06	GENERAL REVISIONS		

GEORGIA
DEPARTMENT OF TRANSPORTATION
TYPICAL SECTIONS
PROJECT: NH-IM-520-1(15)
COUNTY: RICHMOND
DATE: DRAWING 2-15