| STATE | PROJECT NUMBER | SHEET NO. | TOTAL SHEETS |
|---|---|---|---|
| GA. | NH-IM-520-1(15) | 19 | 1321 |

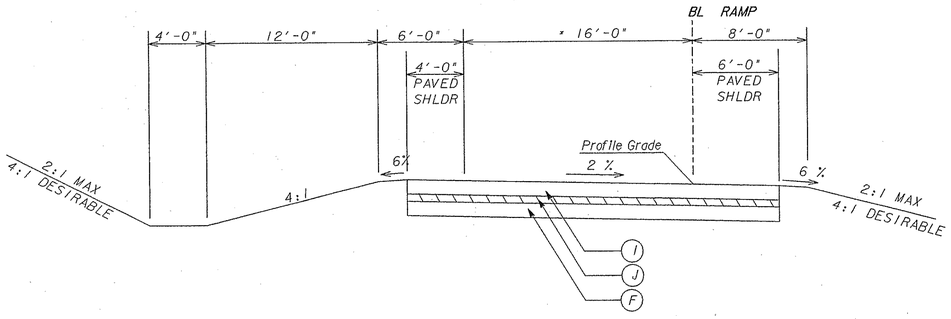


ONE LANE RAMP

TANGENT SECTION

RAMP H - STA 160+26 TO 163+10
RAMP H - STA 177+42 TO 185+37
RAMP C- STA 122+01 TO 123+92
RAMP C- STA 130+82 TO 131+96

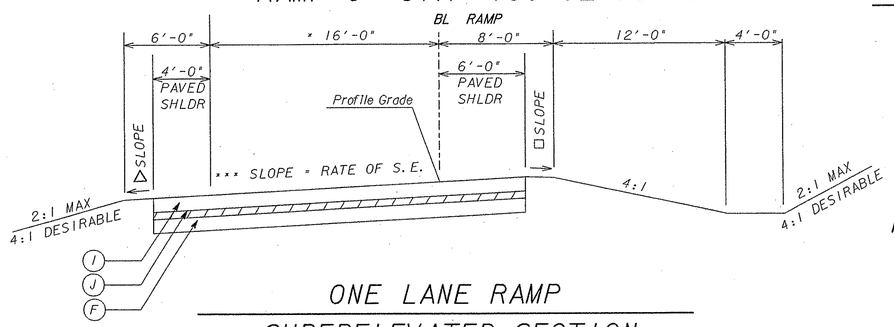


ONE LANE RAMP

SUPERELEVATED SECTION

RAMP H - STA 163+10 TO 177+19
RAMP H - STA 185+37 TO 168+56
RAMP C- STA 123+92 TO 130+82
RAMP C- STA 131+96 TO 137+51

* SEE PLANS FOR PAVEMENT WIDTH TRANSITIONS AT GORES

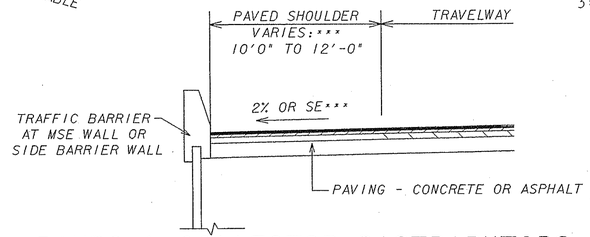


RAMPS & COLLECTOR DISTRIBUTORS

SHOULDER DETAIL AT WALL

RAMP N - STA 51+22 TO 57+25
RAMP A - STA 217+31 TO 230+09
RAMP G - STA 215+47 TO 217+31
RAMP H - 176+77 TO 180+14
RAMP E - STA 139+23 TO 140+91
RAMP C - STA 138+50 TO 148+00
RAMP D - STA 149+97 TO 174+00
I-520 NBCD - STA 197+54 TO 208+91
RAMP P - STA 155+50 TO 162+63
RAMP Q - STA 162+77 TO 169+80
RAMP R - STA 179+94 TO 194+58
RAMP O - STA 27+07 TO 39+57
RAMP B - STA 132+70 TO 134+00

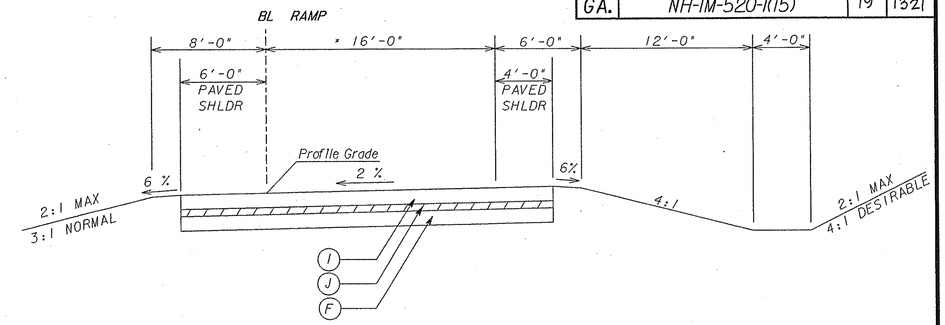


ONE LANE RAMP

TANGENT SECTION

RAMP A- STA 221+81 TO 222+10
RAMP A- STA 224+60 TO 225+29

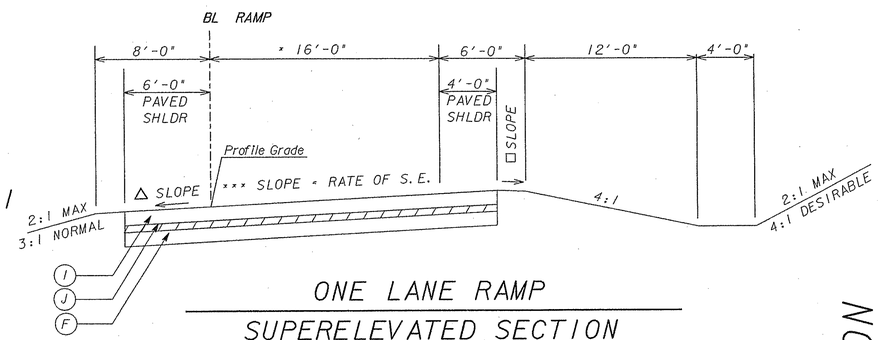


ONE LANE RAMP

SUPERELEVATED SECTION

RAMP A- STA 217+31 TO 221+81
RAMP A- STA 222+10 TO 224+60
RAMP A- STA 225+29 TO 231+59
RAMP E- STA 135+63 TO 144+21
RAMP F- STA 139+43 TO 148+54

* SEE PLANS FOR TRANSITION TO 12' FOR ENTRANCE RAMPS

*** SEE PLANS
*** SEE CONSTRUCTION PLANS FOR SE RATES

△ SLOPE 6% OR RATE OF S.E. WHICHEVER IS GREATER

□ SLOPE AS FOLLOWS:

S.E. RATE OF 0.02ft/ft OR LESS USE 0.06ft/ft
S.E. RATE OF 0.03ft/ft USE 0.05ft/ft
S.E. RATE OF 0.04ft/ft, USE 0.04ft/ft
S.E. RATE OF 0.05ft/ft, USE 0.03ft/ft
S.E. RATE OF 0.06ft/ft, USE 0.02ft/ft
S.E. RATE OF 0.07ft/ft, USE +0.01ft/ft

ALGEBRAIC DIFFERENCE IN PAVING AND SHOULDER SLOPES NOT TO EXCEED 0.08ft/ft

REQUIRED PAVEMENT

Ⓐ ASPHALTIC CONCRETE 12.5 mm PEM POLYMER MODIFIED-135 LBS/SY
Ⓑ ASPHALTIC CONCRETE 12.5 mm SMA POLYMER MODIFIED-220 LBS/SY
Ⓒ ASPHALTIC CONCRETE 19 mm SUPERPAVE-440LBS/SY
Ⓓ ASPHALTIC CONCRETE LEVELING- VARIABLE, FOR X-SLOPE CORRECTION
Ⓔ ASPHALTIC CONCRETE BASE 25 mm SUPERPAVE-660 LBS/SY
Ⓕ GRADED AGGREGATE BASE - 12"
Ⓖ ASPHALTIC CONCRETE 19 mm SUPERPAVE - 455 LBS/SY
Ⓗ GRADED AGGREGATE BASE - 5"
Ⓘ PLAIN PC CONCRETE PAVEMENT - 12"
Ⓙ ASPHALTIC CONCRETE 19 mm SUPERPAVE-330 LBS/SY
Ⓚ ASPHALTIC CONCRETE 12.5mm SUPERPAVE - 165 LBS/SY
Ⓛ ASPHALTIC CONCRETE 19 mm SUPERPAVE - 220 LBS/SY
Ⓝ GRADED AGGREGATE BASE - 9"

SLOPE CONTROLS

| SLOPE | CUT | FILL |
|---|---|---|
| 4:1 | 0-6' | 0-10' |
| 3:1 | OVER 6' | OVER 10'** |
| *2:1 | OVER 10' | OVER 10'** |

*SEE CROSS SECTIONS FOR LOCATIONS. 2:1 SLOPES REQUIRE SLOPE STABILIZATION.
**REQUIRES GUARDRAIL

USE ON CONSTRUCTION

NOT TO SCALE

GREENHORNE & O'MARA
G&O PROJECT NO. 0085
2211 NEWMARKET PARKWAY
SUITE 104
MARIETTA, GA. 30067
(770) 988-9555

| DATE | REVISIONS | DATE | REVISIONS |
|---|---|---|---|
| 11/14/08 | REVISED STATIONING FOR RAMP C - 'SHOULDER DETAIL AT WALL' | | |

GEORGIA
DEPARTMENT OF TRANSPORTATION
TYPICAL SECTIONS
PROJECT: NH-IM-520-1(15)
COUNTY: RICHMOND
DATE:
DRAWING 2-13

18-DEC-2008 09:28/2008 h:\GDOT\120-1520.2008\20450\Files for SBarriers\20450typ.dgn