STATE	PROJECT NUMBER	SHEET NO.	TOTAL SHEETS
GA.	NH-IM-520-1(15)	12	1321

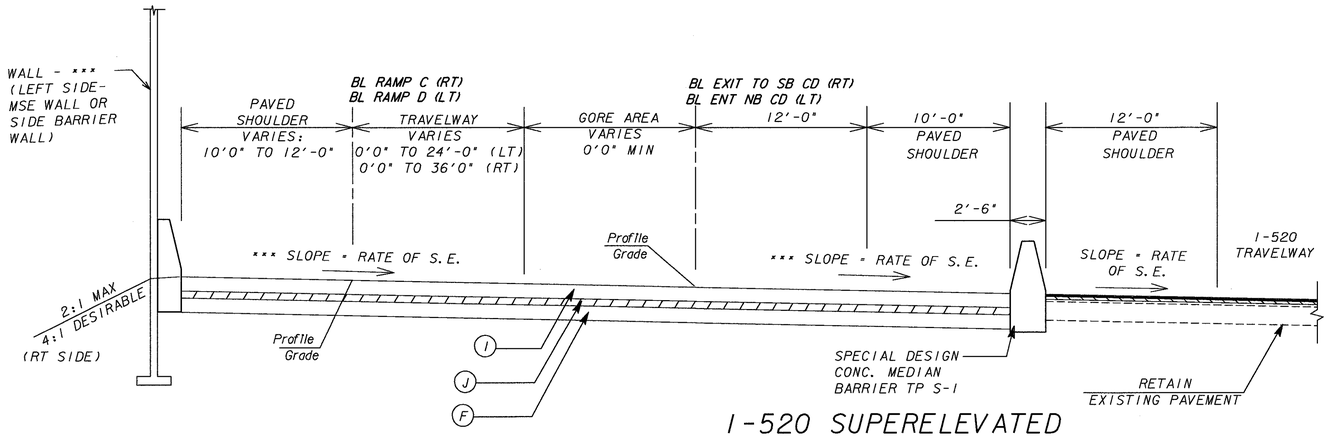

I-520 SUPERELEVATED COLLECTOR DISTRIBUTOR

STA 91+03 TO 97+54 LT
STA 94+38 TO 102+52 RT

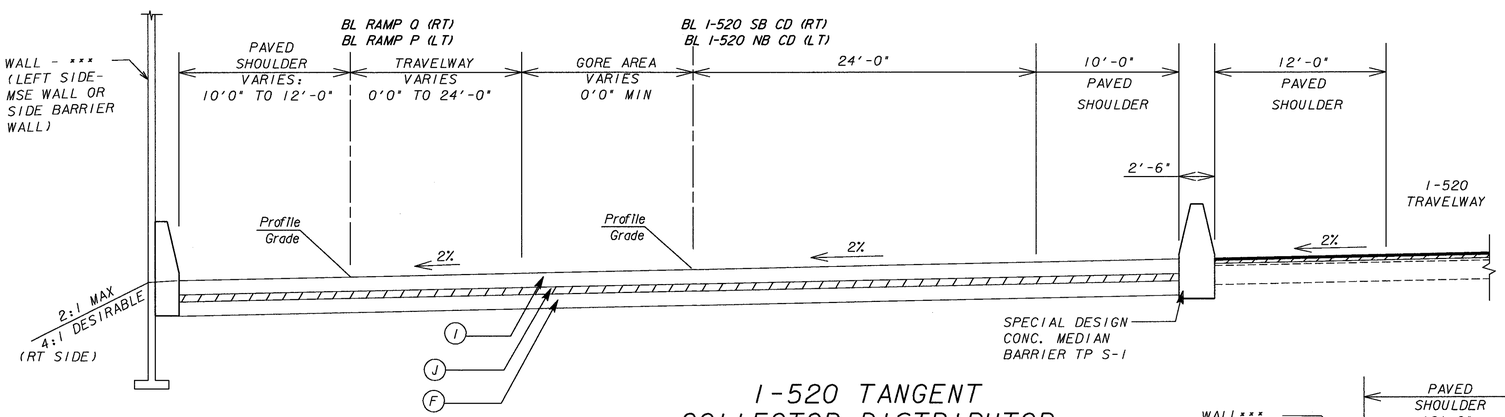

I-520 TANGENT COLLECTOR DISTRIBUTOR

STA 108+68 TO 113+72 LT
STA 106+17 TO 118+95 RT

△ SLOPE 4% OR RATE OF S.E. WHICHEVER IS GREATER

□ SLOPE AS FOLLOWS:

S.E. RATE OF 0.02ft/ft OR LESS USE 0.04ft/ft
S.E. RATE OF 0.03ft/ft USE 0.04ft/ft
S.E. RATE OF 0.04ft/ft, USE 0.04ft/ft
S.E. RATE OF 0.05ft/ft, USE 0.03ft/ft
S.E. RATE OF 0.06ft/ft, USE 0.02ft/ft
S.E. RATE OF 0.07ft/ft, USE +0.01ft/ft

ALGEBRAIC DIFFERENCE IN PAVING AND SHOULDER SLOPES NOT TO EXCEED 0.08ft/ft

SLOPE CONTROLS		
SLOPE	CUT	FILL
4:1	0-6'	0-10'
3:1	OVER 6'	OVER 10'**
*2:1	OVER 10'	OVER 10'**

*SEE CROSS SECTIONS FOR LOCATIONS. 2:1 SLOPES REQUIRE SLOPE STABILIZATION.
**REQUIRES GUARDRAIL

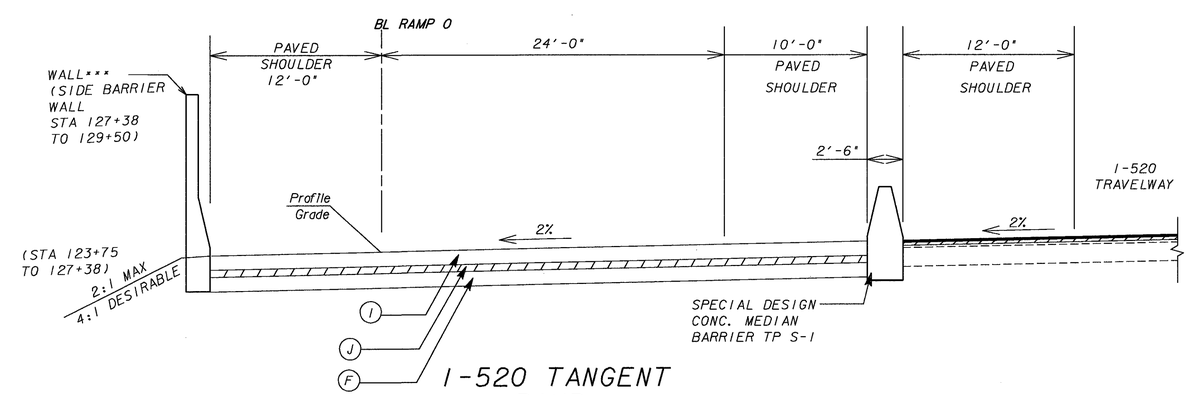

I-520 TANGENT RAMP

STA 123+75 TO 129+50 LT

*** SEE PLANS FOR LOCATION / SE RATES

REQUIRED PAVEMENT

- (A) ASPHALTIC CONCRETE 12.5 mm PEM POLYMER MODIFIED-135 LBS/SY
- (B) ASPHALTIC CONCRETE 12.5 mm SMA POLYMER MODIFIED-220 LBS/SY
- (C) ASPHALTIC CONCRETE 19 mm SUPERPAVE-440LBS/SY
- (D) ASPHALTIC CONCRETE LEVELING- VARIABLE, FOR X-SLOPE CORRECTION
- (E) ASPHALTIC CONCRETE BASE 25 mm SUPERPAVE-660 LBS/SY
- (F) GRADED AGGREGATE BASE - 12"
- (G) ASPHALTIC CONCRETE 19 mm SUPERPAVE - 455 LBS/SY
- (H) GRADED AGGREGATE BASE - 5"
- (I) PLAIN PC CONCRETE PAVEMENT - 12"
- (J) ASPHALTIC CONCRETE 19 mm SUPERPAVE-330 LBS/SY
- (K) ASPHALTIC CONCRETE 12.5mm SUPERPAVE - 165 LBS/SY
- (L) ASPHALTIC CONCRETE 19 mm SUPERPAVE - 220 LBS/SY
- (N) GRADED AGGREGATE BASE - 9"

NOT TO SCALE

GREENHORNE & O' MARA
G&O PROJECT NO. 0085
2211 NEWMARKET PARKWAY
SUITE 104
MARIETTA, GA. 30067
(770) 988-9555

DATE	REVISIONS	DATE	REVISIONS
11-17-06	GENERAL REVISIONS		
01-26-07	REV'D SHOULDERS		

GEORGIA
DEPARTMENT OF TRANSPORTATION
TYPICAL SECTIONS
PROJECT: NH-IM-520-1(15)
COUNTY: RICHMOND
DATE:
DRAWING 2-06

1/24/2007 6:11:41 PM \\ATLFS2\JOBS\CIVIL\CADNET\DCF\BATCH.dcf atl-plotstats jtrans\0085\PLOT\mato\typicalsections\21045ctyp.06.pr-f