STATE	PROJECT NUMBER	SHEET NO.	TOTAL SHEETS
GA.	NH-IM-520-1(15)	11	1321

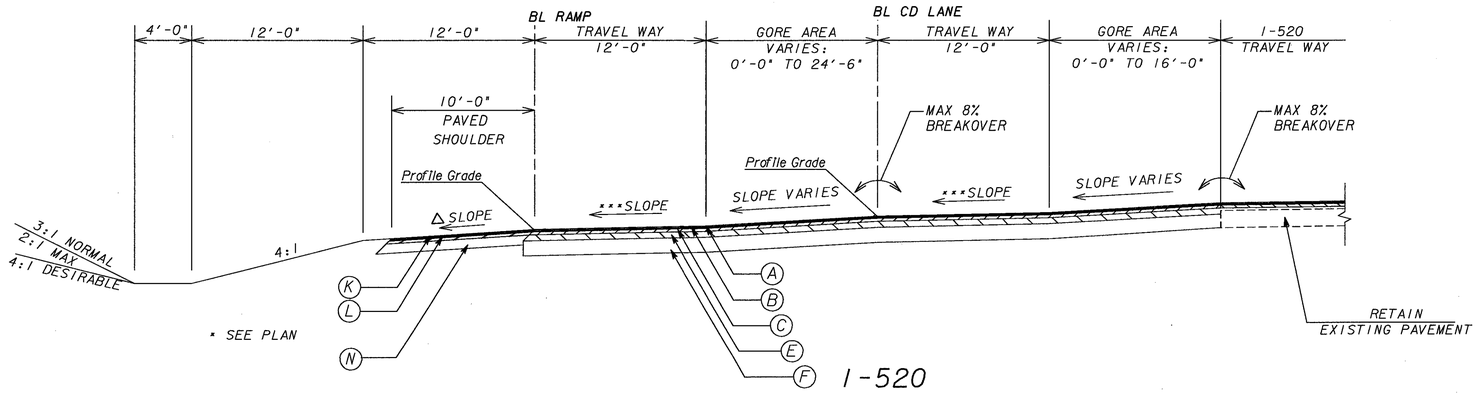

DETAIL AT RAMP & CD GORES
STA 77+54 TO 82+01 LT AT RAMP F & ENT FROM NBCD

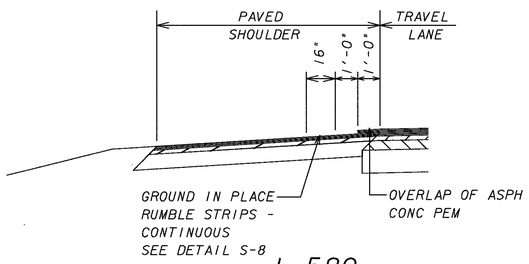

OUTSIDE SHOULDER DETAIL

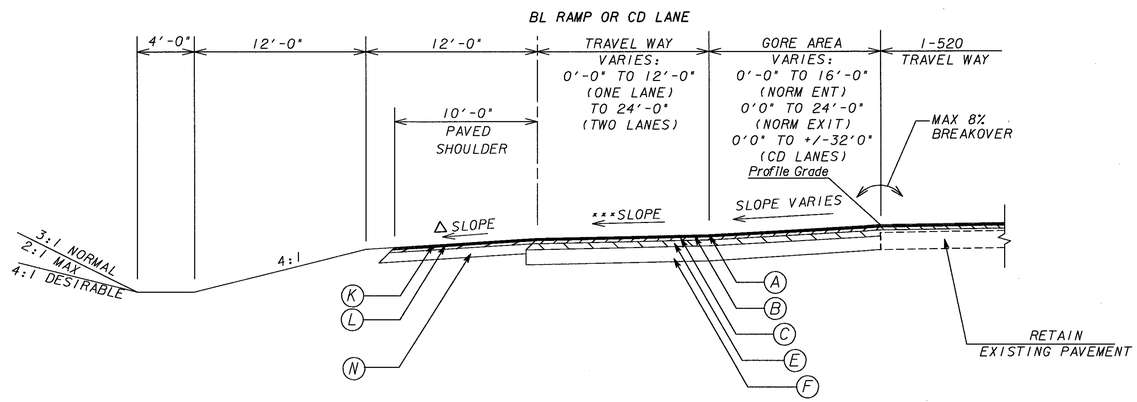

DETAIL AT RAMP & CD GORES
STA 81+75 TO 83+05 RT AT RAMP E
STA 82+01 TO 91+03 LT AT ENT FROM NBCD
STA 85+00 TO 92+23 RT AT EXIT TO SBCD
STA 113+72 TO 123+75 LT AT NBCD
STA 118+95 TO 131+84 RT AT SBCD
STA 129+50 TO 142+70 LT AT RAMP O
STA 131+84 TO 146+35 RT AT RAMP R

SLOPE CONTROLS		
SLOPE	CUT	FILL
4:1	0-6'	0-10'
3:1	OVER 6'	OVER 10' **
*2:1	OVER 10'	OVER 10' **

*SEE CROSS SECTIONS FOR LOCATIONS. 2:1 SLOPES REQUIRE SLOPE STABILIZATION.
**REQUIRES GUARDRAIL

REQUIRED PAVEMENT

- (A) ASPHALTIC CONCRETE 12.5 mm PEM POLYMER MODIFIED-135 LBS/SY
- (B) ASPHALTIC CONCRETE 12.5 mm SMA POLYMER MODIFIED-220 LBS/SY
- (C) ASPHALTIC CONCRETE 19 mm SUPERPAVE-440LBS/SY
- (D) ASPHALTIC CONCRETE LEVELING- VARIABLE, FOR X-SLOPE CORRECTION
- (E) ASPHALTIC CONCRETE BASE 25 mm SUPERPAVE-660 LBS/SY
- (F) GRADED AGGREGATE BASE - 12"
- (G) ASPHALTIC CONCRETE 19 mm SUPERPAVE - 455 LBS/SY
- (H) GRADED AGGREGATE BASE - 5"
- (I) PLAIN PC CONCRETE PAVEMENT - 12"
- (J) ASPHALTIC CONCRETE 19 mm SUPERPAVE-330 LBS/SY
- (K) ASPHALTIC CONCRETE 12.5mm SUPERPAVE - 165 LBS/SY
- (L) ASPHALTIC CONCRETE 19 mm SUPERPAVE - 220 LBS/SY
- (N) GRADED AGGREGATE BASE - 9"

*** SEE CONSTRUCTION PLANS FOR SE RATES

△ SLOPE 4% OR RATE OF S.E. WHICHEVER IS GREATER

□ SLOPE AS FOLLOWS:

S.E. RATE OF 0.02ft/ft OR LESS USE 0.04ft/ft
S.E. RATE OF 0.03ft/ft USE 0.04ft/ft
S.E. RATE OF 0.04ft/ft, USE 0.04ft/ft
S.E. RATE OF 0.05ft/ft, USE 0.03ft/ft
S.E. RATE OF 0.06ft/ft, USE 0.02ft/ft
S.E. RATE OF 0.07ft/ft, USE +0.01ft/ft

ALGEBRAIC DIFFERENCE IN PAVING AND SHOULDER SLOPES NOT TO EXCEED 0.08ft/ft

NOT TO SCALE

GREENHORNE & O' MARA
G&O PROJECT NO. 0085
2211 NEWMARKET PARKWAY
SUITE 104
MARIETTA, GA. 30067
(770) 988-9555

DATE	REVISIONS	DATE	REVISIONS
11-17-06	GENERAL REVISIONS		
01-26-07	REV'D SHOULDERS		

GEORGIA
DEPARTMENT OF TRANSPORTATION
TYPICAL SECTIONS
PROJECT: NH-IM-520-1(15)
COUNTY: RICHMOND
DATE:
DRAWING 2-05

1/24/2007 6:11:41 PM \\ATLFS2\J085\CIVIL\CADNET\GCF\BATCH.dgf atl.plotsets jt\Trans\0085\PLOT\misc\typicalsections\21045Ptyp-05.pmf