STATE	PROJECT NUMBER	SHEET NO.	TOTAL SHEETS
GA.	BRST-0981(2)	148	231

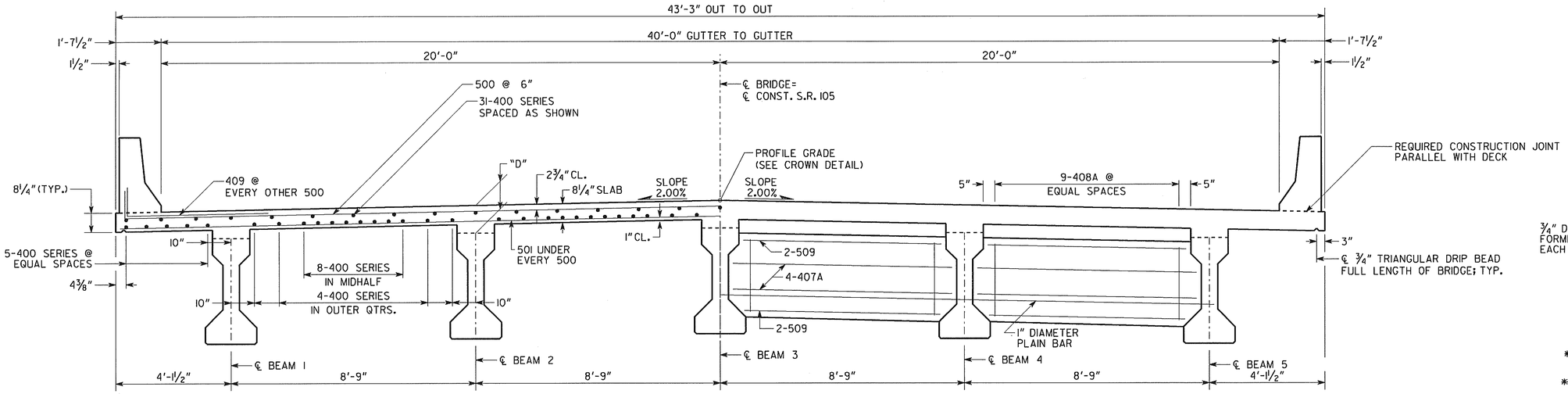

HALF SECTION THRU SLAB

HALF SECTION THRU DIAPHRAGM

SPANS 1 AND 2

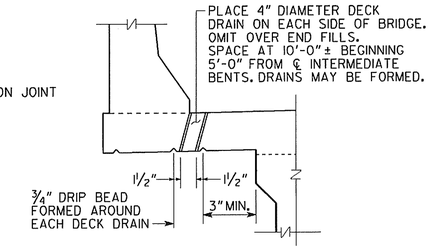

DECK DRAIN DETAIL

NO SCALE

* TAPERS TO 0" AT END POST

** AT CONTRACTOR'S OPTION, 10" RADIUS MAY BE REPLACED BY STRAIGHT INTERSECTING SLOPES.

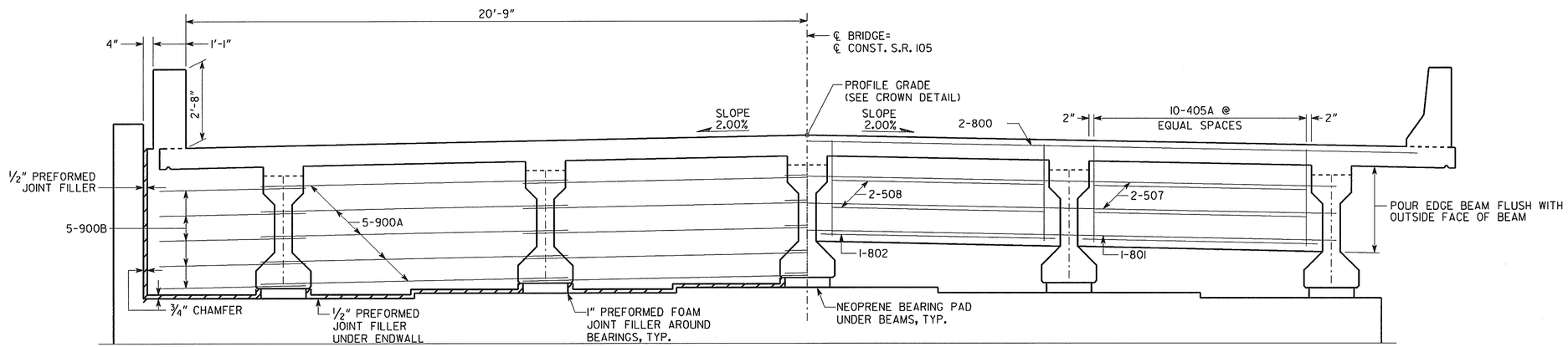

HALF SECTION THRU ENDWALL

SPANS 1 AND 2

HALF SECTION THRU EDGE BEAM

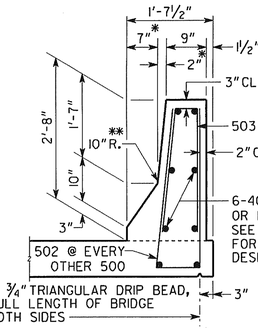

BARRIER DETAIL

SCALE: ¾" = 1'-0"

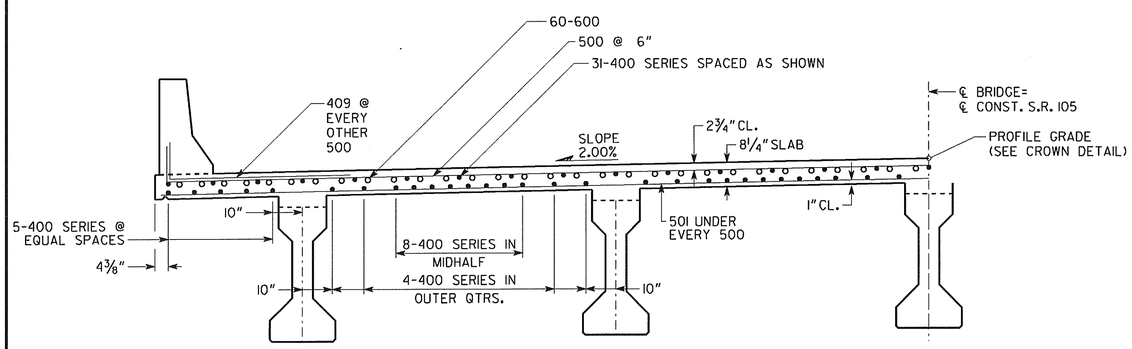

SECTION THRU SLAB AT INTERMEDIATE BENT

SPANS 1&2

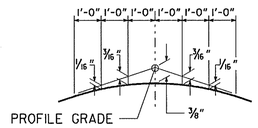

CROWN DETAIL

2.00% CROSS SLOPE

NOTES

1. CLEARANCE OF REINFORCEMENT IS 2" UNLESS NOTED.
2. SECTIONS ARE CUT LOOKING AHEAD.
3. DIMENSION "D" IS MEASURED FROM TOP OF SLAB TO TOP OF BEAMS AT CENTERLINE BEARING. VARY "D" BETWEEN BEARINGS TO COMPENSATE FOR DEAD LOAD DEFLECTION AND VERTICAL CURVE. MAINTAIN A CONSTANT SLAB THICKNESS OF 8¼".
   "D" = 1'-0" FOR INTERIOR AND EXTERIOR BEAMS.
4. BEAM SPACINGS SHOWN ARE MEASURED NORMAL TO BEAMS.
5. BARS 404, 504A, 506A, AND 506B ARE NOT SHOWN IN ENDWALL FOR CLARITY. SEE DECK PLAN SHEET FOR DETAILS AND SPACING.

BRIDGE NO. 1

THE LPA GROUP

THE LPA GROUP INCORPORATED
TRANSPORTATION CONSULTANTS
3595 ENGINEERING DRIVE
NORCROSS, GEORGIA 30092
(770) 263-9118

PB 100 YEARS
3340 PEACHTREE ROAD, NE
SUITE 2400, TOWER PLACE
ATLANTA, GA 30326-1001

GEORGIA
DEPARTMENT OF TRANSPORTATION
PRECONSTRUCTION DIVISION-OFFICE OF BRIDGE DESIGN

DECK SECTIONS - SPANS 1 & 2
S.R. 105 OVER
MIDDLE FORK BROAD RIVER

BANKS COUNTY — BRST-0981(2)

SCALE: ½" = 1'-0" UNLESS NOTED — FEBRUARY 2004

BY	REVISIONS	DATE

DESIGNED SDH		CHECKED DWH	REVIEWED AWB
DRAWN PBO		DESIGN GROUP EJC	APPROVED PVL

BRIDGE SHEET 5 OF 16

G:\TMP\000\Bridge.tbl
G:\TMP\000\142266dsl.prf
G:\15869_LPA\W005\Cadd\Struct\142266dsl.dgn
Wed May 5 17:02:18 2004