STATE	PROJECT NUMBER	SHEET NO.	TOTAL SHEETS
GA.	BRST-0981(2)	147	231

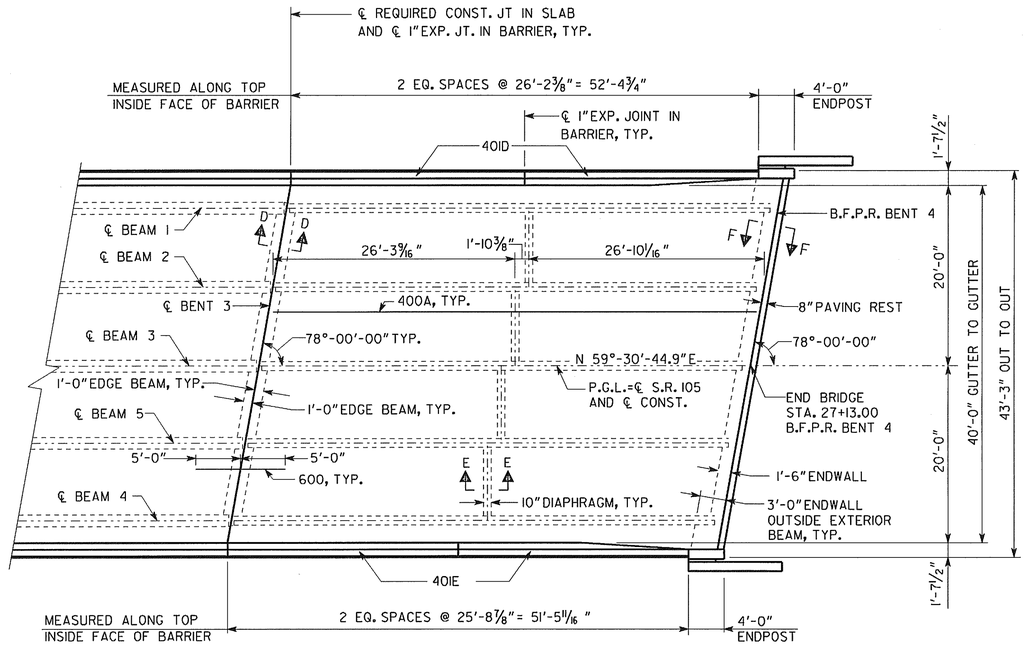

SPAN 3

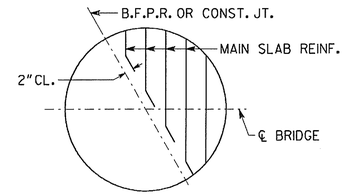

AT B.F.P.R. OR CONST. JOINT

BARS ARE DETAILED IN BAR DETAILS AS EQUIVALENT FULL LENGTH BARS.

BAR BENDING DETAILS AT SKEWED JOINTS

NO SCALE

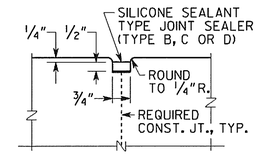

DETAIL "A"

NO SCALE

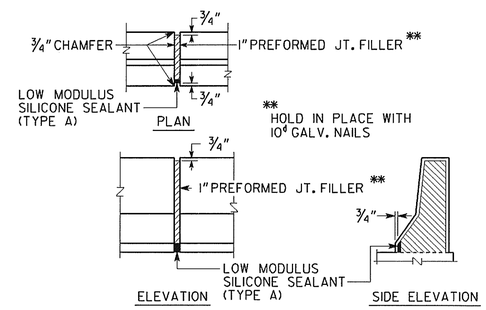

DETAILS OF 1" EXPANSION JOINT IN BARRIER

NO SCALE

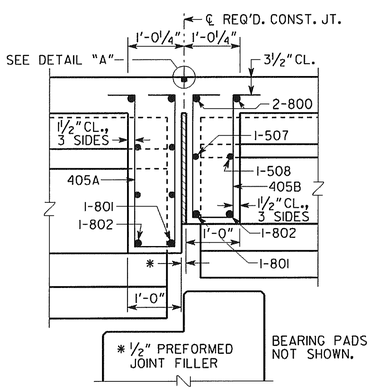

SLAB REINFORCEMENT NOT SHOWN.

SECTION D-D THRU EDGE BEAM

SCALE: 3/4" = 1'-0"

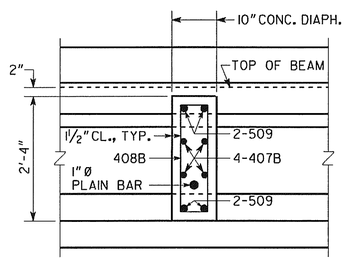

SLAB REINFORCEMENT NOT SHOWN.

SECTION E-E THRU DIAPHRAGM

SCALE: 3/4" = 1'-0"

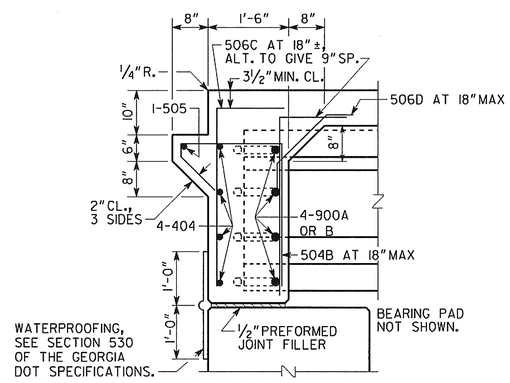

SLAB REINFORCEMENT NOT SHOWN.

SECTION AT F-F ENDWALL

SCALE: 3/4" = 1'-0"

BRIDGE NO. 1

THE LPA GROUP

THE LPA GROUP INCORPORATED
TRANSPORTATION CONSULTANTS
3595 ENGINEERING DRIVE
NORCROSS, GEORGIA 30092
(770) 263-9118

PB 100 YEARS

3340 PEACHTREE ROAD, NE
SUITE 2400, TOWER PLACE
ATLANTA, GA 30326-1001

GEORGIA
DEPARTMENT OF TRANSPORTATION
PRECONSTRUCTION DIVISION-OFFICE OF BRIDGE DESIGN

DECK PLAN - SPAN 3
S.R. 105 OVER
MIDDLE FORK BROAD RIVER

BANKS COUNTY — BRST-0981(2)

SCALE: 1/8" = 1'-0" UNLESS NOTED — FEBRUARY 2004

BY	REVISIONS	DATE

DESIGNED SDH	CHECKED DWH	REVIEWED AWB
DRAWN PBO	DESIGN GROUP EJC	APPROVED PVL

BRIDGE SHEET 4 OF 16

C:\TMP\000A\Bridge.tbl
C:\TMP\000A\142266dp2.prf
G:\1566_LPA\Work\Cad\Struct\142266dp2.dgn
Wed May 5 17:02:23 2004