EB US 78/SR 10

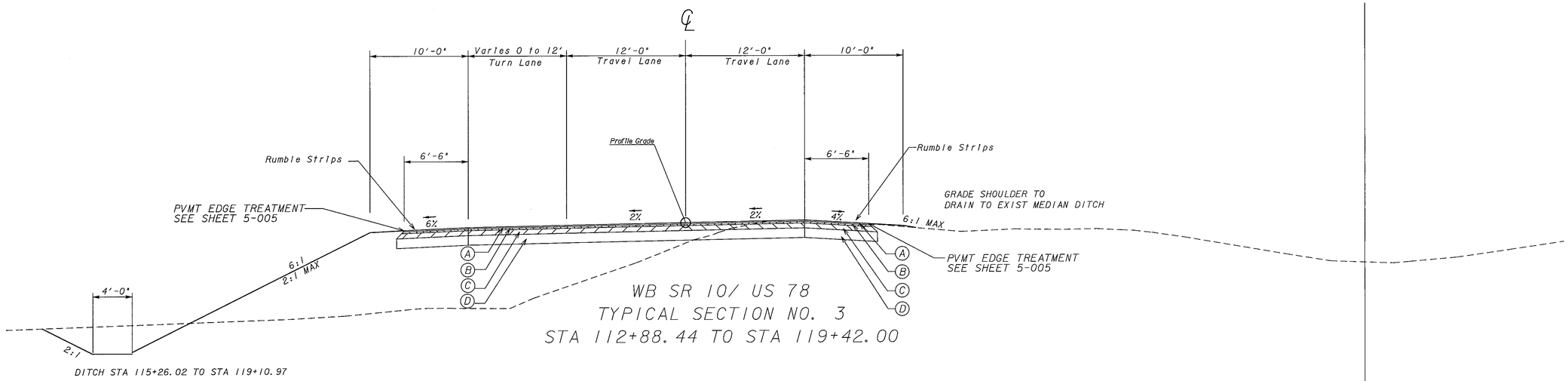

WB SR 10/ US 78
TYPICAL SECTION NO. 3
STA 112+88.44 TO STA 119+42.00

DITCH STA 115+26.02 TO STA 119+10.97

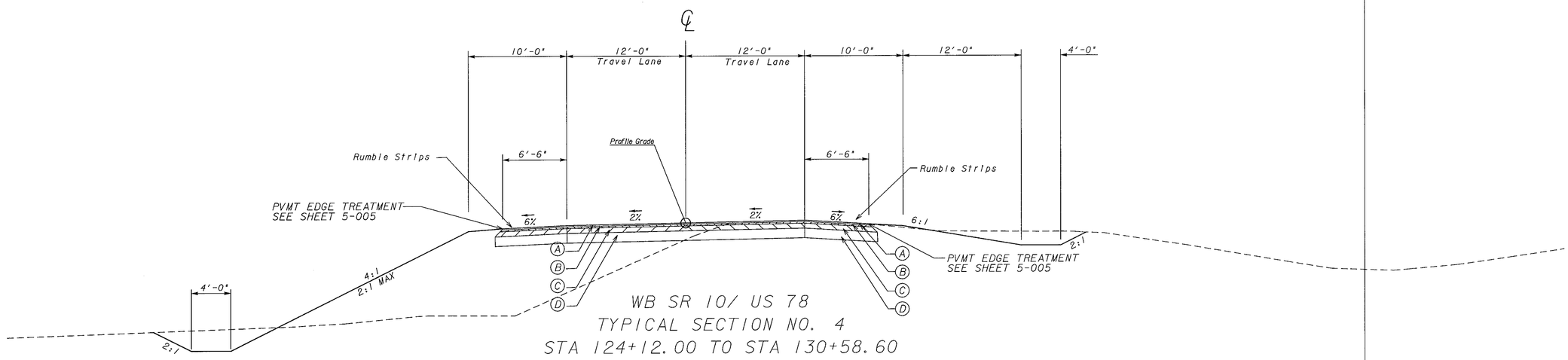

WB SR 10/ US 78
TYPICAL SECTION NO. 4
STA 124+12.00 TO STA 130+58.60

DITCH STA 124+00.00 TO STA 130+49.00

REQUIRED PAVEMENT

(A) RECYCLED ASPHALTIC CONCRETE 12.5 mm, SUPERPAVE, GP 2 ONLY, INCL. BITUM MAT'L & H. LIME (165 LB/SQ. YD.)
(B) RECYCLED ASPHALTIC CONCRETE 19 mm, SUPERPAVE, GP 1 OR 2, INCL. BITUM MAT'L & H. LIME (220 LB/SQ. YD.)
(C) RECYCLED ASPHALTIC CONCRETE 25 mm, SUPERPAVE, GP 1 OR 2, INCL. BITUM MAT'L & H. LIME (440 LB/SQ. YD.)
(D) GRADED AGGREGATE BASE, 12 IN
(E) RECYCLED ASPH CONC LEVELING, INCL BITUM MATL & H LIME (AS DIRECTED BY ENGINEER)
(F) MILLING, VARIABLE DEPTH

S.E. RATE	shoulder slope
2.0% OR 3.0%	6.0%
4.0% OR 5.0%	2.0%
6.0% OR 7.0%	1.0%
8.0 % +	0.0%

GRESHAM SMITH AND PARTNERS

NOT TO SCALE

REVISION DATES

STATE OF GEORGIA
DEPARTMENT OF TRANSPORTATION
OFFICE: PROGRAM DELIVERY

TYPICAL SECTIONS
SR 10 / US 78

BRSTO-0061-01(110)
WALTON & OCONEE COUNTY

DRAWING No. 05-002

1/5/2009 GPLN