STATE	PROJECT NUMBER	SHEET NO.	TOTAL SHEETS
GA.	BRST-052-1(14)	62	135

DIMENSION "D" IS MEASURED FROM TOP OF SLAB TO TOP OF BEAMS AT CENTERLINE BEARING. VARY "D" BETWEEN BEARINGS TO COMPENSATE FOR DEAD LOAD DEFLECTION AND VERTICAL CURVE. MAINTAIN A CONSTANT SLAB THICKNESS OF 7¾"
"D" = 9½" FOR INTERIOR BEAMS
"D" = 9⅝" FOR EXTERIOR BEAMS

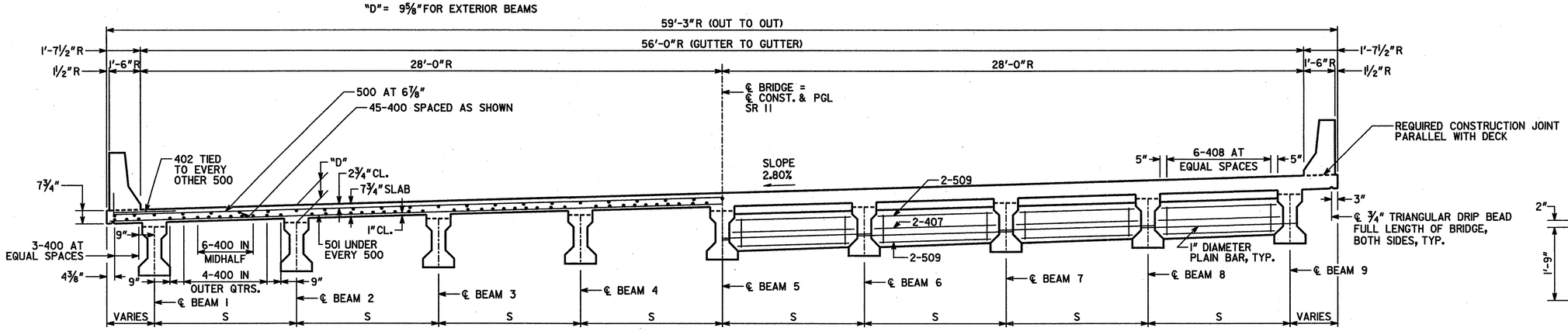

SECTION THRU SLAB

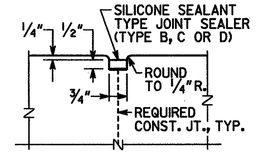

DETAIL "A"
NOT TO SCALE

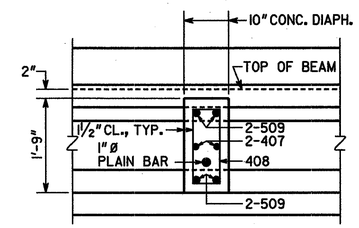

SLAB REINFORCEMENT NOT SHOWN.

SECTION THRU DIAPHRAGM
NOT TO SCALE

SECTION THRU DIAPHRAGM

SPAN	BEAM SPACING "S"
1	6'-9⅞"
2	6'-10"
3	6'-10⅛"

R = RADIAL DIMENSION

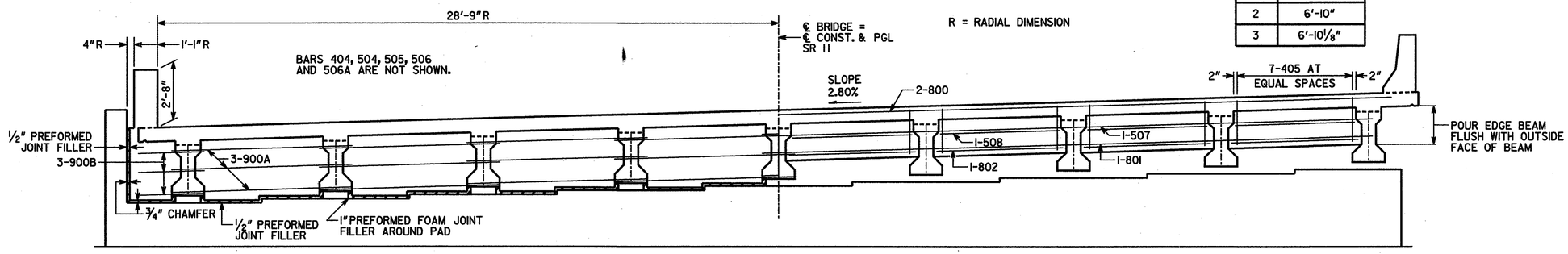

SECTION THRU ENDWALL

SECTION THRU EDGE BEAM

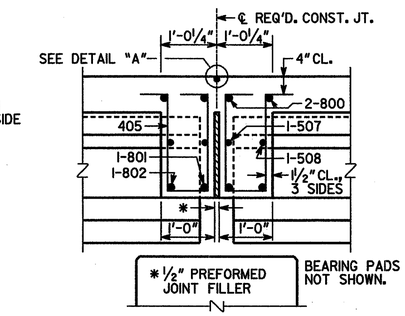

SLAB REINFORCEMENT NOT SHOWN.

SECTION THRU EDGE BEAM
NOT TO SCALE

NOTES:

1. MAINTAIN 2" CLEARANCE ON ALL REINFORCEMENT UNLESS NOTED.
2. THE CONTRACTOR SHALL PROVIDE BRACING BETWEEN THE EXTERIOR BEAM AND THE FIRST INTERIOR BEAM UNTIL THE DECK HAS BEEN POURED AND THE OVERHANG FORMS REMOVED. ALL COST FOR DESIGNING, PROVIDING, INSTALLING AND REMOVING BRACING SHALL BE INCLUDED IN PRICE BID FOR LUMP - SUPERSTRUCTURE CONCRETE.

BRIDGE NO. 1

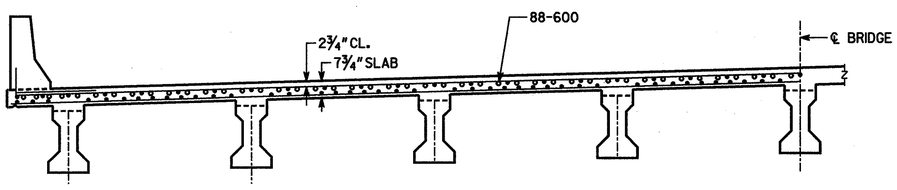

SECTION THRU SLAB AT INTERMEDIATE BENT

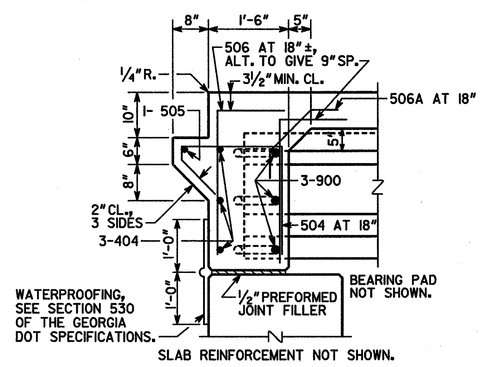

SECTION AT ENDWALL
NOT TO SCALE

URS
URS CORPORATION
400 NORTHPARK TOWN CENTER
1000 ABERNATHY ROAD, N. E.
SUITE 900
ATLANTA, GA 30328
TEL: (678) 808-8800
FAX: (678) 808-8400

GEORGIA
DEPARTMENT OF TRANSPORTATION
PRECONSTRUCTION DIVISION-OFFICE OF BRIDGE DESIGN

DECK SECTIONS
SR 11 OVER SCOTT CREEK
BARROW COUNTY — BRST-052-1(14)

SCALE: ⅜" = 1'-0" — JANUARY 2007

DRAWING NO. 35-04
BRIDGE SHEET 4 OF 13

REVISIONS — BY — DATE

DESIGNED CAV — CHECKED RSC — REVIEWED WEI/WMD
DRAWN BM — DESIGN GROUP EJC — APPROVED PVL

X.DGN

5/31/2007 2:22:44 PM P:\TRAFFIC\14142-093_Scott_Creek\Bridge\Final\DGN\4881-BR104-DS.dgn