STATE	PROJECT NUMBER	SHEET NO.	TOTAL SHEETS
GA.	STP-056-1(67)SPUR	120	152

NOTE:
FOR MINIMAL REDUCTION (TO 2') OF SHOULDER ACROSS BRIDGE, ALIGNMENT SHALL BE STRAIGHT FOR SHORT INSTALLATIONS (LESS THAN 200' TOTAL) AS SHOWN HEREON. FOR LONGER INSTALLATIONS OR GREATER REDUCTION OF SHOULDER WIDTH, GUARDRAIL INSTALLATION SHALL BE AS PER DETAIL AT BOTTOM MIDDLE.

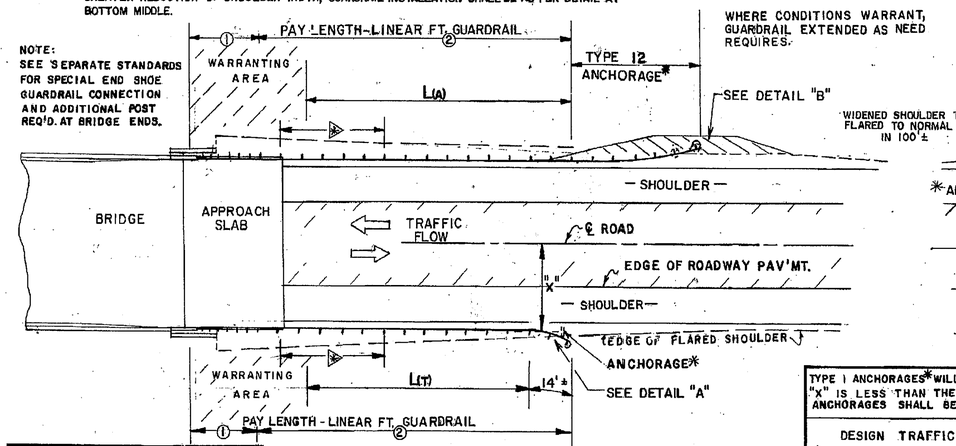

TRAFFIC VOLUME	MIN. L(T)	MIN. L(A)
DHV OVER 400	100'-0"	137'-6"
DHV 200-400	87'-6"	125'-0"
DHV 100-200	75'-0"	112'-6"
ADT 400 & OVER	62'-6"	100'-0"
ADT UNDER 400	50'-0"	87'-6"

NOTE: THESE MINIMUM LENGTHS ARE FOR STRAIGHT ALIGNMENTS IN ADVANCE OF WARRANTING AREA.

① 20'-7¾" OF T BEAM (STD. 4012-C)
② VARIABLE LENGTH OF W BEAM (6'-3" POST SPA.)

GUARDRAIL LOCATION AT BRIDGE ENDS

20 10 0 20 FT.
SCALE

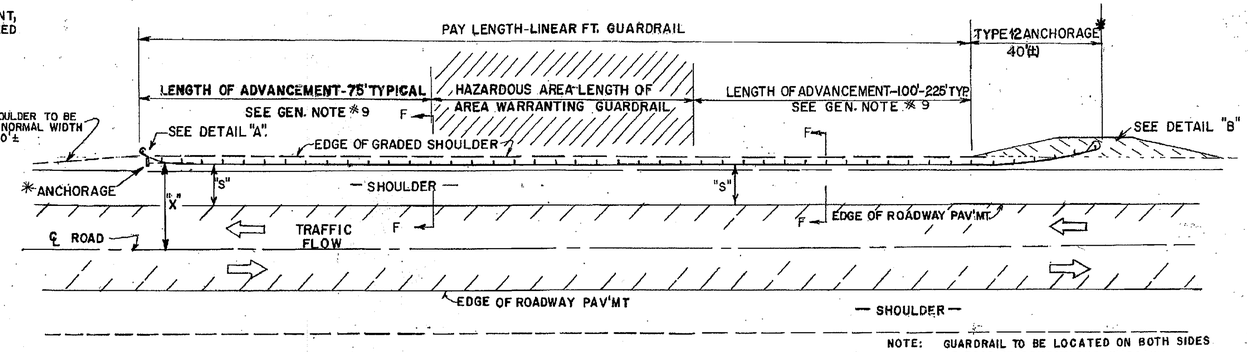

NOTE: GUARDRAIL TO BE LOCATED ON BOTH SIDES OF ROAD IF CONDITIONS WARRANT.

GUARDRAIL LOCATION ALONG ROADWAY

20 10 0 20 FT.
SCALE

TYPE 1 ANCHORAGES* WILL BE UTILIZED AT THE TRAILING END, UNLESS THE DISTANCE "X" IS LESS THAN THE PARAMETER GIVEN IN THIS TABLE IN WHICH CASE TYPE 11 ANCHORAGES SHALL BE REQUIRED.

DESIGN TRAFFIC VOLUME		DESIGN SPEEDS (AS SHOWN ON COVER SHEET)			
		40 MPH	50 MPH	55 MPH	60 MPH
OVER 6000	A.D.T.	14'	18'	22'	30'
1500-6000	A.D.T.	12'	16'	20'	26'
750-1500	A.D.T.	10'	12'	16'	20'
UNDER 750.	A.D.T.	7'	10'	12'	16'

"S" IS THE OFFSET TO THE FACE OF THE GUARDRAIL; THIS WILL BE TWO(2) FEET GREATER THAN THE USABLE SHOULDER WIDTH (PER AASHTO MINIMUM SHOULDER REQUIREMENTS) EXCEPT WHERE THE CURRENT A.D.T. IS UNDER 400, IN WHICH CASE "S" MAY BE EQUAL TO THE USABLE OR GRADED SHOULDER WIDTH (NOT LESS THAN 4).

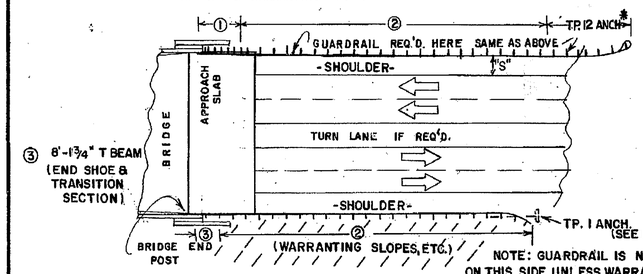

NOTE: GUARDRAIL IS NOT REQUIRED ON THIS SIDE UNLESS WARRANTED BY ROAD SIDE CONDITIONS.

GUARDRAIL AT BRIDGE END OF MULTI-LANE UNDIVIDED HIGHWAY

NO SCALE

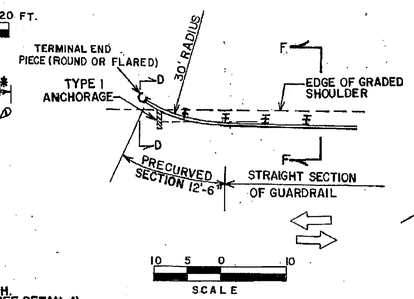

DETAIL "A"

NOTE:
DETAIL "A" IS FOR USE ONLY WHERE TYPE 1 ANCHORAGES ARE PERMITTED AS SHOWN ABOVE. OTHERWISE, SEE DETAIL "B" FOR PROPER INSTALLATION OF TYPE 12 ANCHORAGE.*

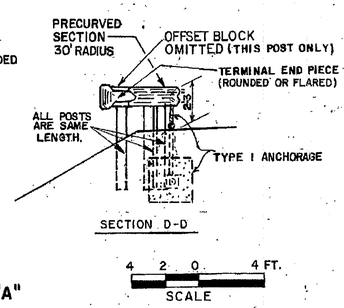

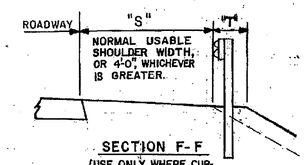

SECTION F-F
(USE ONLY WHERE CURRENT ADT IS UNDER 400)

"T" = 3'-6" FOR NORMAL LENGTH POST; MAY BE REDUCED TO 2'-6" WITH 7'-0" LENGTH POST, AS DIRECTED BY THE ENGINEER.

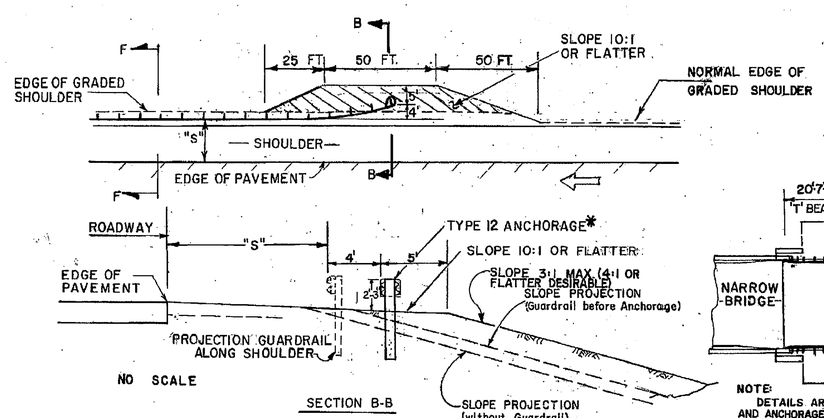

NO SCALE

DETAIL "B"

WHERE SHOWN ON THE PLANS OR APPROVED BY THE ENGINEER, THE EMBANKMENT FLARE SHOWN ABOVE FOR TYPE 1 ANCHORAGE MAY BE MODIFIED, PROVIDED 10:1 OR FLATTER SLOPES ARE PROVIDED IN FRONT OF THE RAIL & A CONSTANT 27 INCH RAIL HEIGHT IS MAINTAINED.

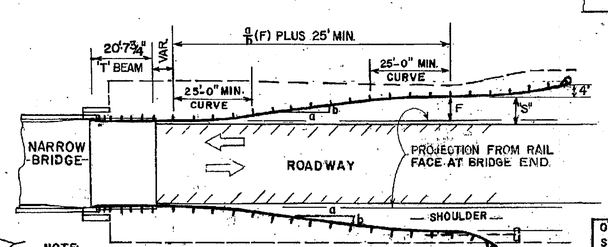

NOTE:
DETAILS ARE SIMILAR FOR BOTH SIDES, BUT LENGTHS AND ANCHORAGE TYPES MAY DIFFER.

GUARDRAIL LOCATION AT END OF NARROW BRIDGE
(NOTE: DETAILS NOT SHOWN HERE ARE SIMILAR TO THOSE AT TOP LEFT.)

OPERATING SPEED (MPH)	FLARE RATE a/b
60	13:1 MIN.
55	12:1 MIN.
50	11:1 MIN.
40	9:1 MIN.

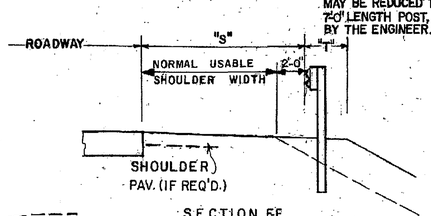

SECTION FF
(USE FOR ALL CONDITIONS, EXCEPT WHERE CURRENT ADT IS UNDER 400.

GENERAL NOTES:

1. GUARDRAIL, ITS FITTINGS, PARTS, ETC. ARE TO BE IN ACCORDANCE WITH GEORGIA STANDARD SPECIFICATIONS AND/OR SPECIAL PROVISIONS.
2. FOR DETAILS OF BEAM TYPE GUARDRAIL, ACCESSORIES, GUARDRAIL POSTS OFFSET BLOCKS, GUARDRAIL ANCHORAGES, TYPE 1, AND TYPE 12, & BRIDGE END CONNECTION DETAILS, SEE APPLICABLE GEORGIA STANDARD PLANS AND/OR CONSTRUCTION DETAILS.
3. ALL OFFSET AND LENGTHS HERE SHOWN ARE APPLIED TO FACE OF GUARDRAIL.
4. POST SPACING SHALL BE 6'3" C. TO C., UNLESS OTHERWISE NOTED.
5. TYPE 12 ANCHORAGES SHOULD BE TERMINATED ON SLOPES 10:1 OR FLATTER. WHERE NORMAL SLOPES STEEPER, A 10:1 OR FLATTER SLOPE SHOULD BE CONSTRUCTED AT LOCATIONS WHERE TYPE 12 ANCHOR FLARES BACK OF SHOULDER.
6. GUARDRAIL SHALL NOT BE ERECTED ON SLOPES WHICH ARE STEEPER THAN 10:1, EXCEPT FOR THE PORTION OF PRECURVED (SHOP CURVED) SECTION THAT EXTENDS BACK OF THE SHOULDER AS SHOWN IN DETAIL "A" WHICH IS ERECTED ON NORMAL SLOPES OR EXCEPT WHERE SHOWN OTHERWISE IN THE PLANS.
7. PAY LENGTH SHALL BE MEASURED ALONG FACE OF GUARDRAIL.
8. W. BEAM GUARDRAIL WILL HAVE A CONSTANT TOP OF RAIL HT. OF 2'-3" THRU OUT INSTALLATION EXCEPT WHERE A PORTION OF THE PRECURVED SECTION SHOWN IN DETAIL "A" EXTENDS BACK OF THE GRADED SHOULDER.
9. GUARDRAIL WILL EXTEND PAST HAZARD ON BOTH THE APPROACH & TRAILING ENDS TO PREVENT VEHICLE PENETRATION BEHIND THE RAIL INTO THE HAZARDOUS AREA. THE TYPICAL LENGTHS OF ADVANCEMENT SHOWN MAY BE INCREASED OR DECREASED WHEN SHOWN IN THE PLANS, OR WHERE DIRECTED BY THE ENGINEER BECAUSE OF SPEED DESIGN, ROADSIDE GEOMETRY, SIZE OF HAZARD, OR OTHER CONDITIONS. IF FURTHER INFORMATION IS DESIRED; SEE GA. D.O.T. "GUIDELINES FOR DETERMINING GUARDRAIL NEED, LOCATION AND STANDARDS" OR AASHTO "ROADSIDE DESIGN GUIDE".

SPECIAL NOTE:
LOCATION AND QUANTITIES GIVEN IN THE PLANS FOR GUARDRAIL AND ANCHORAGES ARE ESTIMATES MADE FROM OFFICE COMPUTATIONS. A FINAL DETERMINATION AS TO LOCATIONS AND QUANTITIES OF GUARDRAIL AND ANCHORAGES WILL BE MADE BY THE ENGINEER OR A REPRESENTATIVE FROM THE OFFICE OF TRAFFIC OPERATIONS AFTER CONSTRUCTION OF ROADWAY.

*OR APPROVED ALTERNATE, MEETING NCHRP 350 REQUIREMENTS

BY	REVISION	DATE
R.M.U.	REV. ANCH. TYPE	10-2-97
R.M.U.	CHG. TP. 9 TO TP. 11	12-12-94
R.M.U.	REV. DET. NARROW BR.	4-23-90
R.M.U.	ADD. ADDL. SEC. F-F	8-30-89
R.M.U.	ADD. "S" CHART	6-2-86
R.M.U.	SHOULDER WIDTHS	11-9-84
R.M.U.	ADD. DET. MULTI-LANE	4-19-84
R.M.U.	ADD. DET. NARROW BR.	3-31-82

DEPARTMENT OF TRANSPORTATION
STATE OF GEORGIA

STANDARD

GUARDRAIL LOCATION DETAILS
FOR UNDIVIDED HIGHWAYS AND ROADS
(WITH SHOULDERS ADJACENT TO ROADWAY) 41.20

SCALE AS SHOWN — REV. & REDR. DECEMBER, 1980

DES. R.M.U.
DRW. R.M.U.
TRA. G.M.E.
CHK. R.K.C.

(SUBMITTED) STATE & AIRPORT DESIGN ENGR.
(APPROVED) STATE HIGHWAY ENGINEER

NUMBER 4052

FORM EF3

3/20/2008 9:59:29 AM \\GDOT-DSN1\GOPLOT\QCF\Road_Design_Tiff-18x12_to_Tiff-36x24.qcf asanford Y:\132940-\Construction\DOT 132940-120.tif GO-RD14