STATE	PROJECT NUMBER	SHEET NO.	TOTAL SHEETS
GA.	STP-056-1(67)SPUR	100	152

NOTE:
TYPE A MEDIAN CROSSOVERS ARE FOR USE ONLY WHERE THE FUTURE TOTAL VOLUME OF THE COMBINED LEFT TURNING MOVEMENTS AND U-TURNS DO NOT EXCEED 20 VEHICLES PER HOUR. DESIRABLY OR WHERE DRAINAGE CONSIDERATIONS MAKE THE TYPE B MEDIAN CROSSOVER DIFFICULT TO CONSTRUCT.

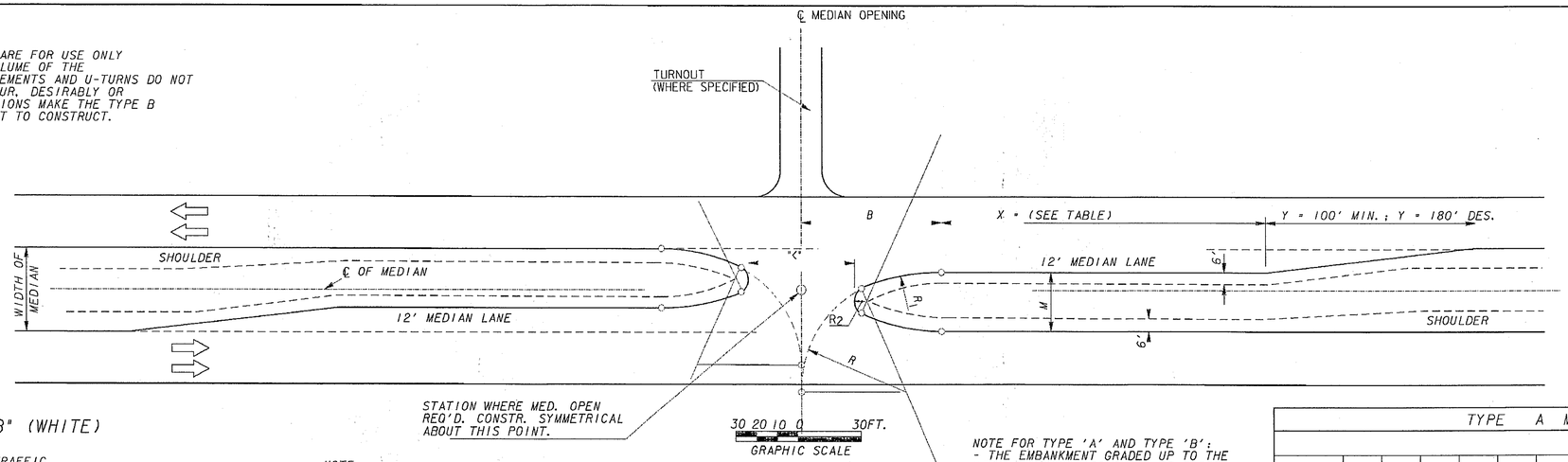

TYPE A MEDIAN CROSSOVER

NOTE:
TYPE B MEDIAN CROSSOVERS ARE THE PREFERRED TYPE OF MEDIAN CROSSOVER. TYPE A MEDIAN CROSSOVER CAN BE USED IN LOW VOLUME SITUATIONS WHERE DRAINAGE CONSIDERATIONS MAKE THE TYPE A MEDIAN CROSSOVER A MORE DESIRABLE OPTION.

NOTE FOR TYPE 'A' AND TYPE 'B':
- THE EMBANKMENT GRADED UP TO THE MEDIAN CROSSOVERS SHALL BE SLOPED AT 20:1 DESIRABLE. 10:1 MIN. NORMALLY. WITH A 6:1 ACCEPTABLE FOR SPEEDS UNDER FORTY-FIVE MILES PER HOUR.

TYPE A MEDIAN CROSSOVERS ●

WIDTH OF MEDIAN	M	L NORM	B NORM	R	R_1	R_2	DECELERATION LENGTH = X Δ (FT) DESIGN SPEED 45 MPH	55 MPH	65 MPH	Y (DES)
40	28	50	67	50	90	6	400(250 MIN)	525(400 MIN)	700(525 MIN)	180
44	32	50	67	50	90	8	400(250 MIN)	525(400 MIN)	700(525 MIN)	180
64	52	44	95	50	150	10	400(250 MIN)	525(400 MIN)	700(525 MIN)	180

Δ 'X' DIMENSION IS FOR DECELERATION ONLY. DOES NOT ACCOUNT FOR ANY STORAGE NEEDED. MIN. VALUES FOR 'X' ARE ONLY TO BE USED WHERE SPACING BETWEEN MEDIAN OPENINGS DOES NOT ALLOW FOR THE MORE DESIREABLE LENGTH.

DETAIL "B" (WHITE)

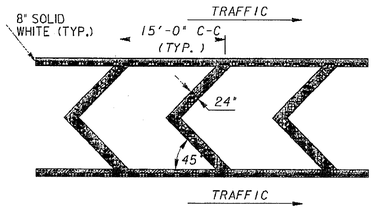

NOTE:
SQUARE YARDS OF STRIPING SHOWN ON PLAN. SUMMARY. AND DETAILED ESTIMATED SHEETS INCLUDES THE AREA WITHIN THE BORDERS. AS WELL AS THE 8" SOLID WHITE BORDER.

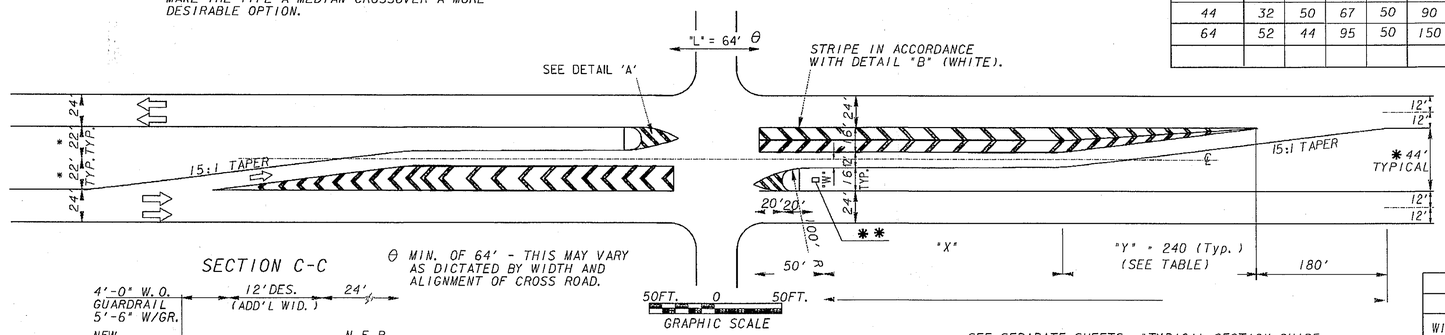

TYPE B MEDIAN CROSSOVER

θ MIN. OF 64' - THIS MAY VARY AS DICTATED BY WIDTH AND ALIGNMENT OF CROSS ROAD.

SEE SEPARATE SHEETS: "TYPICAL SECTION GUIDE FOR TYPE "B" MEDIAN CROSSOVER."

NOTE:
-- PAVEMENT OF MEDIAN CROSSOVERS (ALL TYPES) SHALL BE SLOPED FOR SURFACE DRAINAGE AS SPECIFIED.

TYPE B MEDIAN CROSSOVERS ●

WIDTH OF MEDIAN	DECELERATION LENGTH = Δ (FT.) DESIGN SPEED 45 MPH	55 MPH	65 MPH	Y	W
32	350(200 MIN)	450(350 MIN)	650(450 MIN)	60	4
44	150(50 MIN)	300(150 MIN)	450(300 MIN)	240	16
64	N/A	150(50 MIN)	300(150 MIN)	390	26

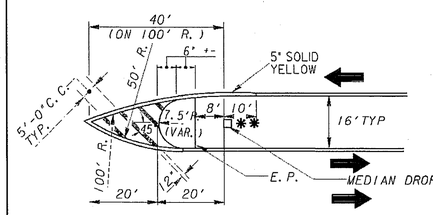

DETAIL "A" (YELLOW)

20FT. 0 20FT.
GRAPHIC SCALE

SECTION C-C

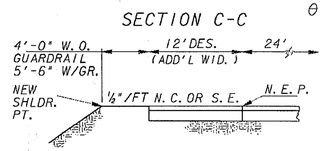

NOTE: SEE GA. STD. 4280 FOR GRRDING WITH G.R.

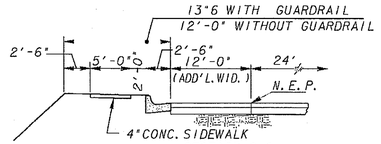

SECTION C-C (CURB & GUTTER)

* DIMENSION MAY VARY WHERE SPECIFIED IN THE PLANS. ADJUSTMENTS TO BE SHOWN FOR ANY WIDTH OTHER THAN 44 FT.

● DIMENSIONS IN FEET (TYP)

** MEDIAN DROP INLET (9031S) CANNOT BE PLACED CLOSER THAN 20 FEET BACK FROM END OF NOSE OF THE MEDIAN.

MEDIAN DROP INLET (9031S) IS NOT RECOMMENDED FOR TYPE B MEDIAN CROSSOVERS WHERE GRADES ARE GREATER THAN 3%.

TYPE C MEDIAN CROSSOVERS ●

DECELERATION LENGTH = X □	
DESIGN SPEED	X (FT)
35 MPH	300(200 MIN.)
45 MPH	400(250 MIN.)
55 MPH	525(400 MIN.)

□ "X" DIMINSION IS FOR DECELERATION ONLY. DOES NOT ACCOUNT FOR ANY STORAGE NEEDED.

NOTE:
- THE TYPE C MEDIAN CROSSOVER SHOWN IS TYPICAL FOR ONE SIDE ROAD CONNECTION. (T-INTERSECTION)
- THE BOTTOM PORTION OF TYPE C IS APPLICABLE ON EACH SIDE OF THE CROSSOVER FOR A CROSS ROAD INTERSECTION OR SIDE ROAD CONNECTION ON EACH SIDE. (X-INTERSECTION)
- THE TOP PORTION OF TYPE C DETAIL IS APPLICABLE ON EACH SIDE OF THE MEDIAN OPENING WITHOUT ANY SIDE ROAD. (U-TURNS ONLY)

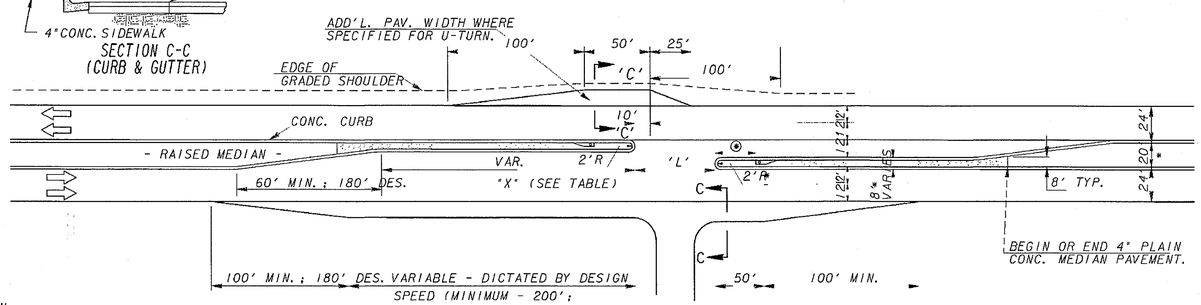

TYPE C MEDIAN CROSSOVER

⊙ IF DRAINAGE STRUCTURE IS REQUIRED IN THE MEDIAN. THE DESIRABLE OFFSET IS 25 FT. OR MORE FROM THE CROSSOVER OPENING.

SPECIAL NOTE:
THE "L" DIMENSIONS SHOWN FOR TYPE A, TYPE B. AND TYPE C CROSSOVERS ARE BASED UPON 50FT. CONTROL RADII FOR LEFT TURNS AND INTERSECTING CROSSROADS OF TWO 12 FT. LANES PERPENDICULAR TO THE MAINLINE. DIFFERENT "L" DIMENSIONS MAY BE SPECIFIED AT LOCATIONS WHERE WARRANTED BY OTHER CONDITIONS.

BY	REVISION	DATE
S.V.M.	REV. TYPE B REQUIREMENTS	10-22-02
M.G.R.	ADDED DECEL. CHARTS	4-30-02
R.M.U.	REV. MEDIAN PAV. LIMITS	3-15-94
R.M.U.	ADDED U-TURN DETAIL	10-23-90
R.M.U.	ADDED SPECIAL NOTE	5-25-88
R.M.U.	GEN. REVISIONS	2-5-88

DEPARTMENT OF TRANSPORTATION
STATE OF GEORGIA

CONSTRUCTION DETAILS

MEDIAN CROSSOVERS

40.08

DES. MGR
DRW. CJ
TRA.
CHK.

JULY, 1987

NUMBER M-3