STATE	PROJECT NUMBER	SHEET NO.	TOTAL SHEETS
GA.	STP-056-1(67) SPUR	89	152

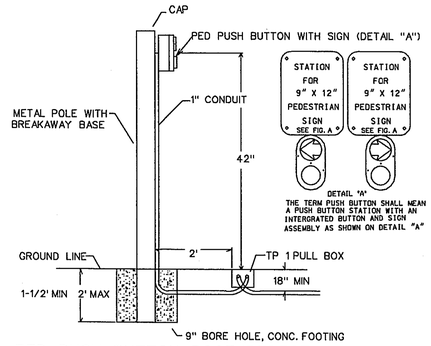

PED. PUSH BUTTON POST/PEDESTAL

FOR USE WHEN DITCHES OR UNEVEN TERRAIN IS BETWEEN POLE AND EDGE OF PAVEMENT.

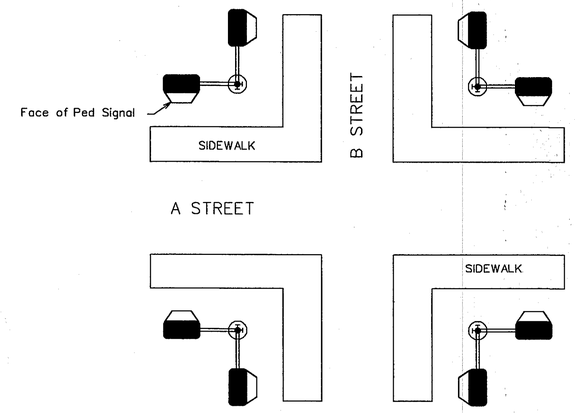

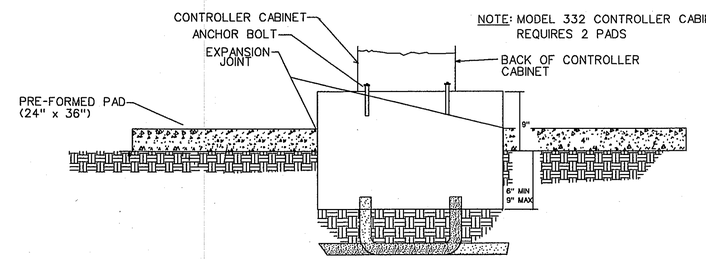

NOTE: MODEL 332 CONTROLLER CABINETS REQUIRES 2 PADS

SECTION A-A

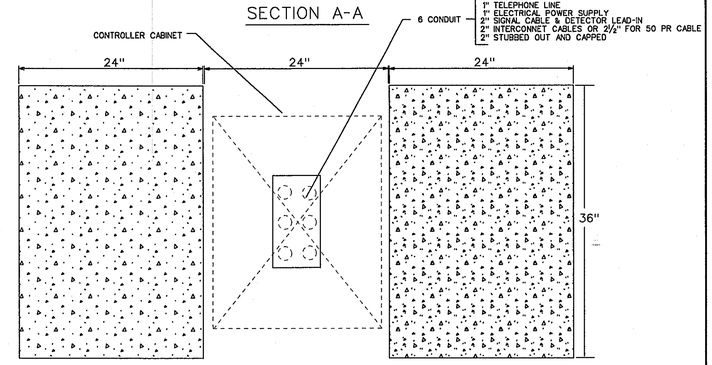

PEDESTRIAN SIGNS

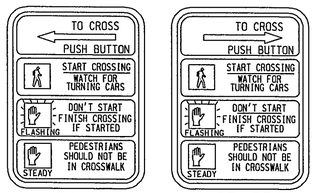

SP-2L 9" X 12" SP-2R 9" X 12"

FIG. A

SUPPORT ANGLES & HARDWARE ARE SUPPLIED WITH PUSHBUTTON STATION

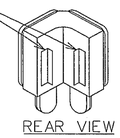

REAR VIEW

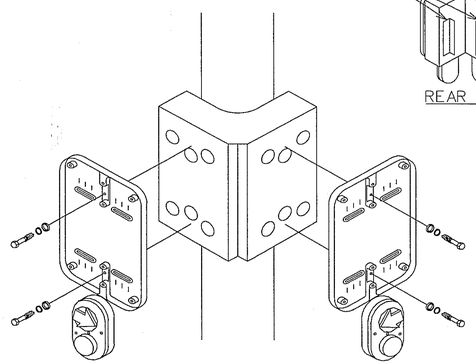

DOUBLE PUSHBUTTON STATION ADAPTER FOR 4" PEDESTRIAN POLE

PEDESTRIAN SIGNAL HEAD ORIENTATION

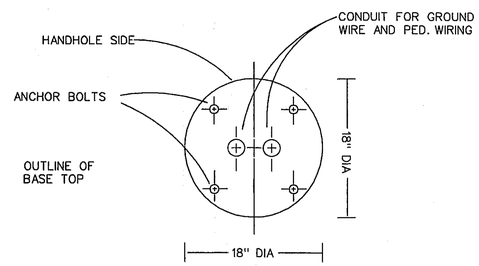

PED POLE BASE (TOP VIEW)

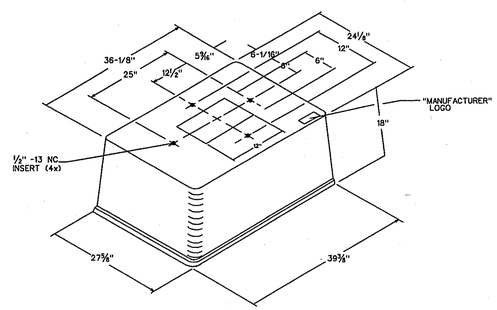

PREFABRICATED CONTROLLER BASE ISOMETRIC DETAIL

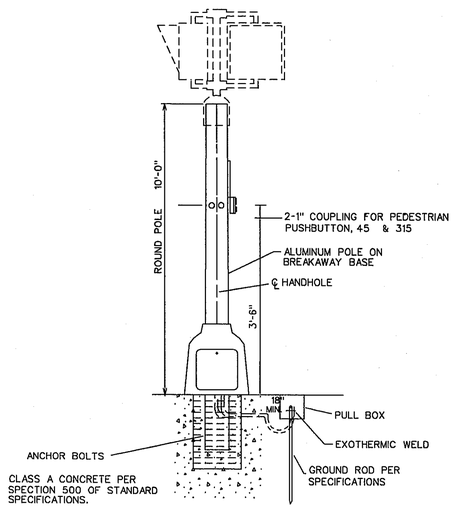

TYPICAL DETAIL FOR PEDESTRIAN SIGNAL POLES

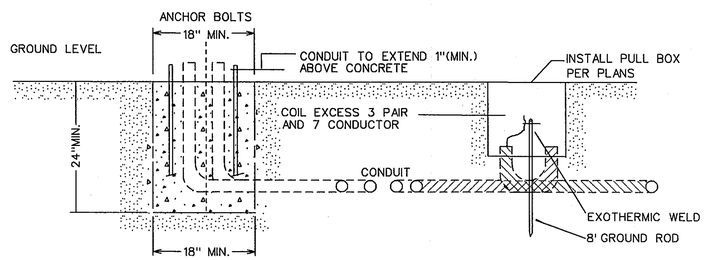

PED. POLE BASE

DATE	REVISIONS
3/31/2002	ADDED - PEDESTRIAN SIGNAL HEAD ORIENTATION DETAIL
10/31/2002	ADDED - NEW DOUBLE PUSHBUTTON STATION ADAPTER FOR 4" PEDESTRIAN POLE

GEORGIA DEPARTMENT OF TRANSPORTATION
OFFICE OF TRAFFIC SAFETY & DESIGN

DETAILS OF PEDESTRIAN FACILITIES AND CONTROLLER CABINET

NO SCALE

SHEET 27.10
DECEMBER 1998

3/20/2008 10:00:53 AM \\GDOT-DSN1\GOPLOT\OCF\Road Design_Tiff-18x12_to_Tiff-36x24.ocf asanford Y:\132940-\Construction\DOT 132940-089.tif GO-RD14