STATE	PROJECT NUMBER	SHEET NO.	TOTAL
GA.	STP-056-1(67)SPUR	6	152

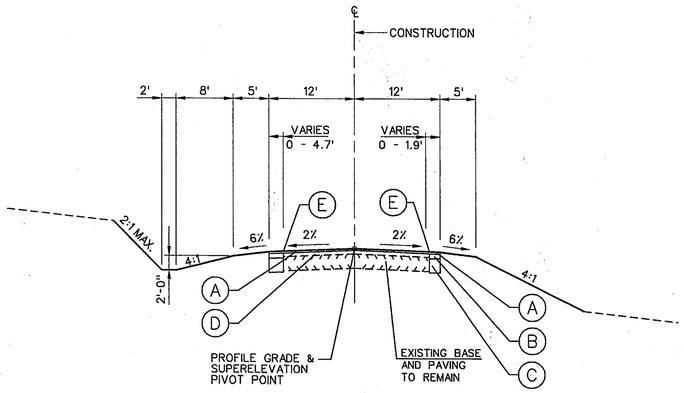

TYPICAL ROADWAY SECTION NO. 5

TANGENT SECTION
SETTINGDOWN CIRCLE
STA 10+00 TO 13+61

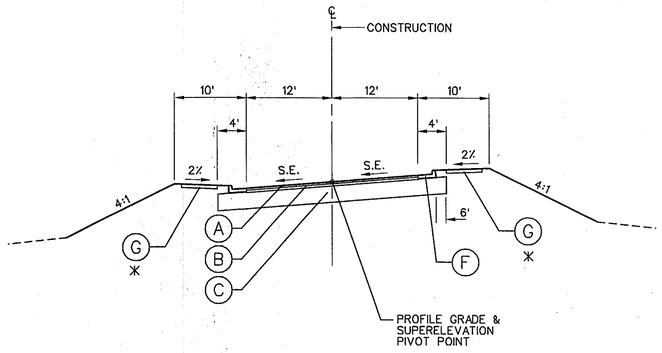

TYPICAL ROADWAY SECTION NO. 6

SUPERELEVATION SECTION
HEARDS CIRCLE
STA 20+15 TO STA 23+00

* SIDEWALK ENDS AT STA 22+14

PAVEMENT DESIGN

- (A) 135 LBS/YD^2 ASPHALTIC CONCRETE, 9.5 mm SUPERPAVE MIX DESIGN LEVEL A
- (B) 330 LBS/YD^2 ASPHALTIC CONCRETE, 19 mm SUPERPAVE MIX DESIGN LEVEL A
- (C) 8" GRADED AGGREGATE BASE
- (D) ASPHALTIC CONCRETE LEVELING, AS REQ'D.
- (E) PAVEMENT REINFORCING FABRIC
- (F) 8" X 30" CONCRETE CURB & GUTTER GA. STD. 9032B, TYPE 2
- (G) 5' CONCRETE SIDEWALK 4" THICK TYPICAL

NOTES:

1. GUTTER ON HIGH SIDE OF SUPERELEVATION TO SPILL AT SE RATE.
2. TYPICAL SECTIONS SHOWING SUPERELEVATION ALSO APPLY TO OPPOSITE HAND SECTIONS - SEE CONSTRUCTION PLAN SHEETS FOR LOCATIONS AND DIRECTIONS FOR SUPERELEVATION.

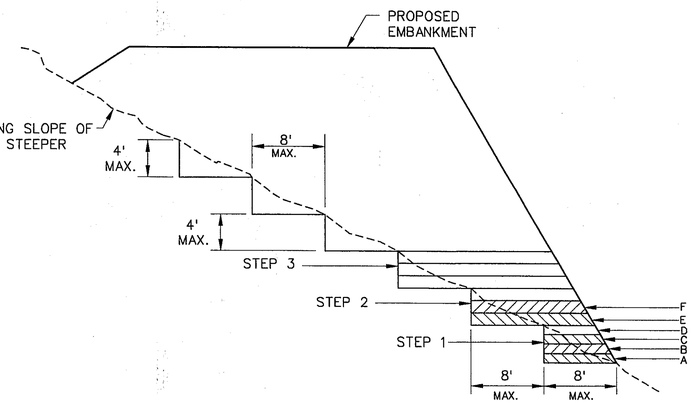

BENCHING DETAIL

N.T.S.

NOTES:

1. WHERE THE EMBANKMENT IS TO BE PLACED ON A HILLSIDE OR ANOTHER EXISTING EMBANKMENT HAVING A SLOPE OF 3 TO 1 OR STEEPER, THE FOUNDATION MUST BE BENCHED WHILE THE EMBANKMENT IS BEING MADE. (SEE DIAGRAM)
2. THE DIAGRAM SHOWS THAT BEFORE LAYER "A" IS PLACED THE FIRST STEP (1) IS CUT INTO THE SLOPE A MAXIMUM DISTANCE OF ABOUT 8' (ABOUT ¾ THE WIDTH OF THE TYPICAL D-8 BULLDOZER BLADE). SUCCESSIVE LAYERS "B", "C", AND "D" ARE THEN PLACED BEFORE LAYER "E" IS PLACED. THE SECOND STEP IS CUT 8' INTO THE SLOPE AND SUCCESSIVE LAYERS ARE AGAIN PLACED, IF IT IS ANTICIPATED THAT THE VERTICAL PART OF THE STEP WILL EXCEED 4' IF A 8' HORIZONTAL CUT IS MADE, THEN THE ACTUAL CUT STOPS WHEN WHEN THE VERTICAL PART REACHES A MAXIMUM OF 4' ALLOWING THE HORIZONTAL DISTANCE TO VARY.
3. THE PROCESS OF BENCHING IS CONSIDERED INCIDENTAL TO THE ITEM OF UNCLASSIFIED EXCAVATION AND BORROW IN CONSTRUCTION OF THE EMBANKMENT AND NO ADDITIONAL MEASUREMENT OF QUANTITY OR PAYMENT WILL BE MADE FOR BENCHING.

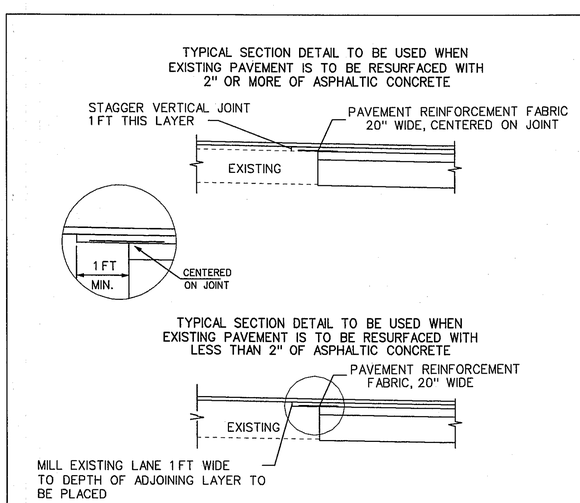

PAVEMENT REINFORCEMENT FABRIC DETAIL

Jordan Jones & Goulding

GEORGIA
DEPARTMENT OF
TRANSPORTATION

NO.	DATE	DESCRIPTION OF REVISION

SR 400/US 19 AT CR 176/SETTINGDOWN ROAD

TYPICAL SECTIONS

DESIGNED:	CHECKED:	DATE:	5.02	
DRAWN:	JOB NO. 2077-758	SCALE: NO SCALE	SHEET	REV

THIS LINE IS ONE INCH LONG WHEN PLOTTED FULL SCALE