VOID

9/8/2014 ytruong	Mon Sep 08 09:41:23 2014	\\gdot-dsni\gocfg\resources\Gdot-2012.tbl	M:\132790-SR 400 INTERCHANGE at SR 53 Dawson County\2.03 DGNs\132790TY02.dgn	STATE	PROJECT NUMBER	SHEET NO.	TOTAL SHEETS
				GA	APD00-0056-01(063)	11	406

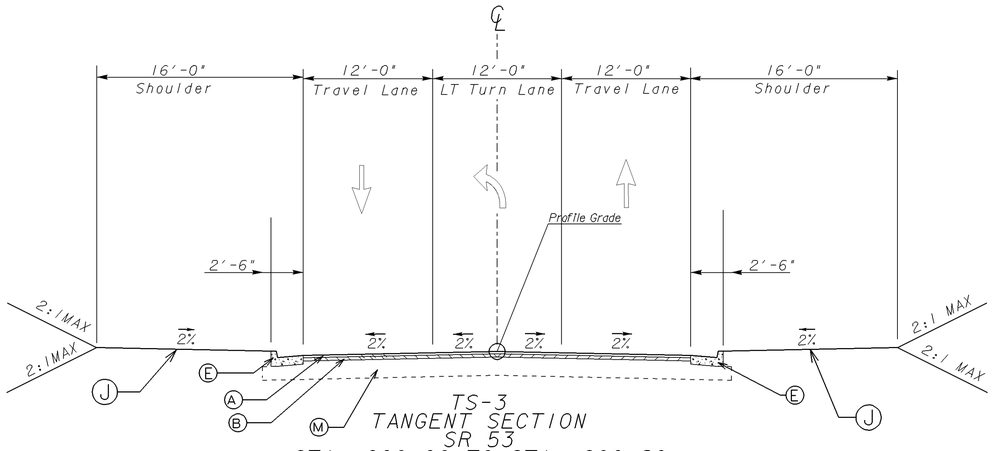

TS-3
TANGENT SECTION
SR 53
STA. 200+00 TO STA. 200+80

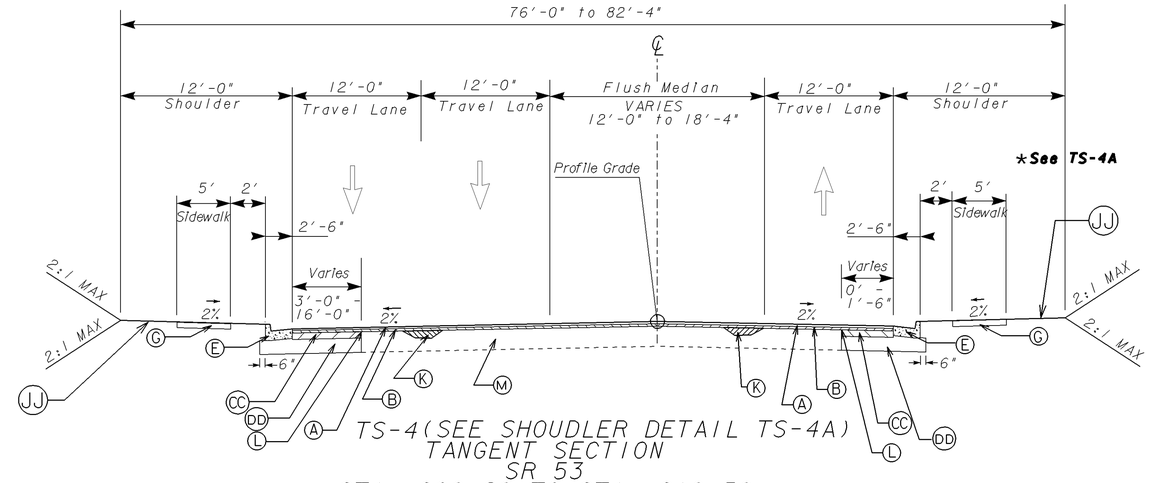

TS-4(SEE SHOULDER DETAIL TS-4A)
TANGENT SECTION
SR 53
STA. 200+80 TO STA. 210+50

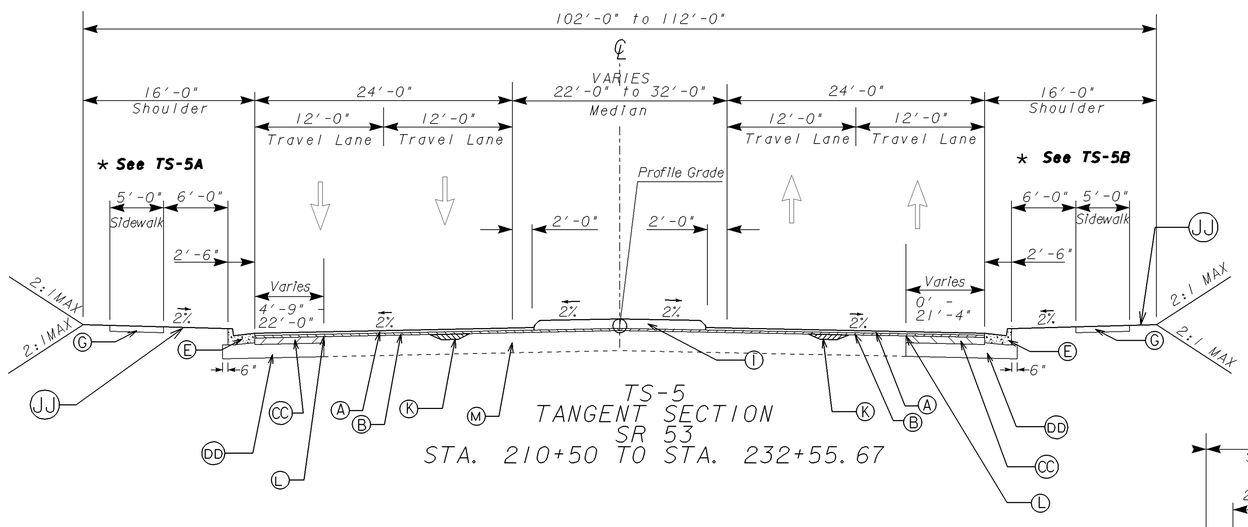

TS-5
TANGENT SECTION
SR 53
STA. 210+50 TO STA. 232+55.67

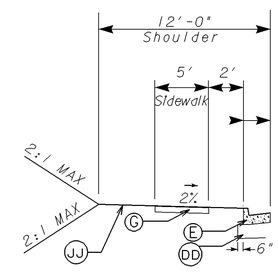

*TS-5A
SHOULDER DETAIL
STA. 225+40 TO STA. 227+65

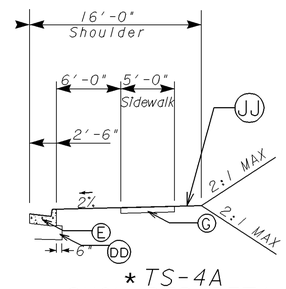

*TS-4A
SHOULDER DETAIL
STA. 206+50 TO STA. 210+50

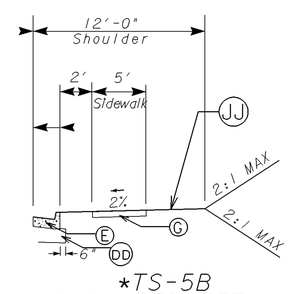

*TS-5B
SHOULDER DETAIL
STA. 210+50 TO STA. 212+00

TYPE OF ACCESS:
BY PERMIT

- (A) RECYCLED ASPH. CONC. 12.5 MM SUPERPAVE, GROUP 2 ONLY, INCL BITUM MATL & H LIME, 165 LBS/SY
- (B) RECYCLED ASPH. CONC. 19 MM SUPERPAVE, GP 1 OR 2, INCL BITUM MATL & H LIME, 330 LBS/SY
- (CC) RECYCLED ASPH. CONC. 25 MM SUPERPAVE, GROUP 1 OR 2, INCL BITUM MATL & H LIME, 770 LBS/SY
- (DD) GRADED AGGREGATE BASE, 12 IN
- (E) CONCRETE CURB & GUTTER, 8 IN X 30 IN, TYPE 2, GDOT STD. 9032B
- (F) CONCRETE CURB & GUTTER, 8 IN X 30 IN, TYPE 7, GDOT STD. 9032B
- (G) CONCRETE SIDEWALK, 4 IN
- (H) 4" CONC. MEDIAN OR GRASS MEDIAN, SEE PLANS FOR DETAILS
- (I) 7.5" INTEGRAL CONC. MEDIAN, TYPE 7, GDOT STD. 9032B
- (J) PERMANENT GRASSING (AS REQUIRED)
- (JJ) SOD
- (K) RECYCLED ASPH. CONC. LEVELING, INCL BITUM MATL & H LIME
- (L) PAVEMENT REINFORCEMENT FABRIC STRIPS, TP 2, 18 IN WIDTH
- (M) 3.5" MILLING

GEORGIA
DEPARTMENT OF TRANSPORTATION

NOT TO SCALE

REVISION DATES

STATE OF GEORGIA
DEPARTMENT OF TRANSPORTATION
OFFICE: ROADWAY DESIGN
TYPICAL SECTIONS
SR53
DRAWING No. 05 -002

1/5/2009 GPLN