STATE	PROJECT NUMBER	SHEET NO.	TOTAL SHEETS
GA.	EDS00-0545-00(020)	748	831

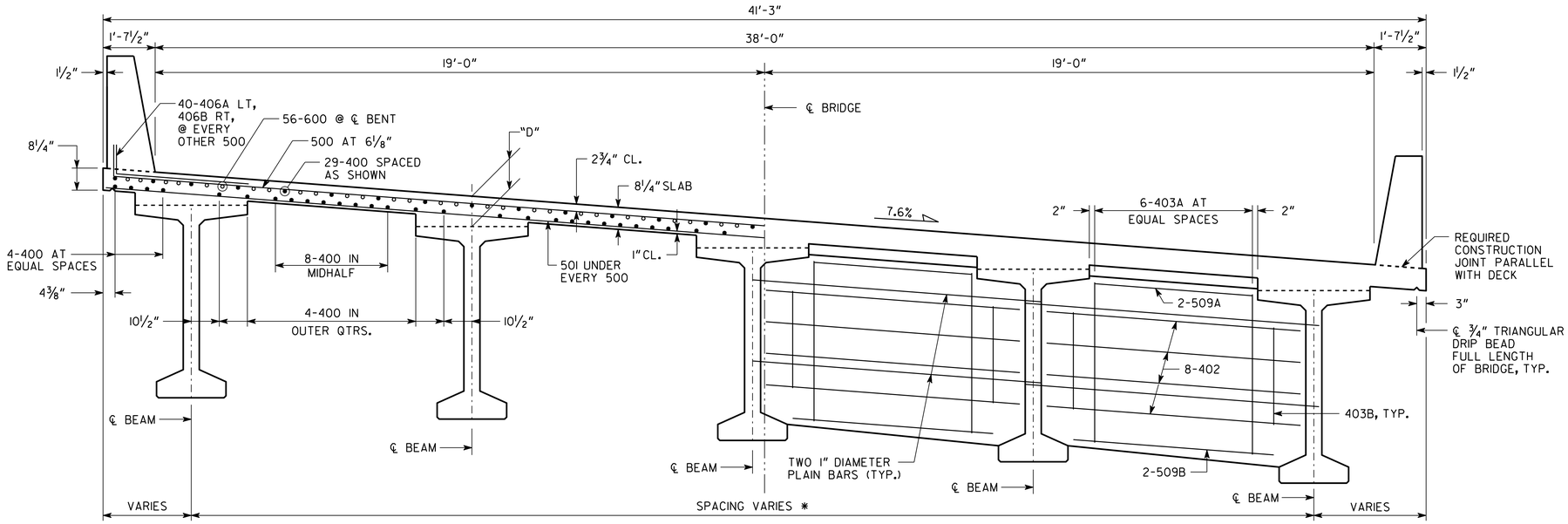

SECTION THRU SLAB

SECTION THRU DIAPHRAGM

NOTE: ALL TRANSVERSE DIMENSIONS ARE RADIAL.

DIMENSION "D" IS MEASURED FROM TOP OF SLAB TO TOP OF BEAMS AT CENTERLINE BEARING. VARY "D" BETWEEN BEARINGS TO COMPENSATE FOR DEAD LOAD DEFLECTION AND VERTICAL CURVE. MAINTAIN A CONSTANT SLAB THICKNESS OF 8¼".

SPAN	"D"
2L	13⅛"
2R	13"
3L	13⅝"
3R	13"
4L	13⅝"
4R	13"

NOTES:

1. PLACE 500 AND 501 BARS RADIALLY. SPACING IS MEASURED ALONG LEFT GUTTERLINE.
2. MAINTAIN 2" COVER ON ALL REINFORCING STEEL UNLESS NOTED.

* BEAMS ARE SPACED RADIALLY AT 8'-9" BASED ON CHORDS OF CONCENTRIC CIRCLES. THEREFORE, BEAM SPACING VARIES WITHIN EACH SPAN.

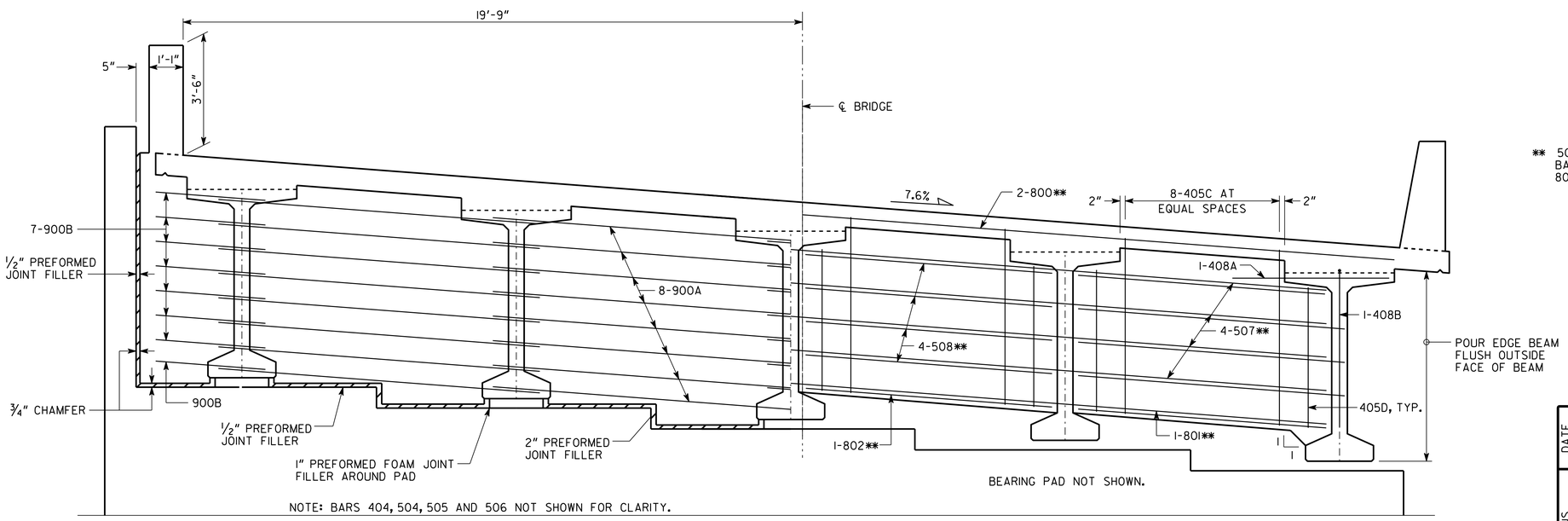

** 507A, 508A 800A 801A, 802A AT BACK BENT. 507B, 508B, 800B, 801B, 802B AT AHEAD BENT.

NOTE: BARS 404, 504, 505 AND 506 NOT SHOWN FOR CLARITY.

SECTION THRU ENDWALL - BENT 5

SECTION THRU EDGE BEAM - BENTS 3 AND 4

NOTE: EDGE BEAM AT BENT 2 AH IS SIMILAR TO BENT 2 BK

BRIDGE NO. 1 LT. & RT.

ARCADIS
2401 PACES FERRY ROAD, SUITE 400
ATLANTA, GEORGIA 30339
TEL: 770/431-8666 FAX: 770/435-2666

GEORGIA
DEPARTMENT OF TRANSPORTATION
ENGINEERING DIVISION-OFFICE OF BRIDGES AND STRUCTURES

DECK SECTION - SPANS 2 - 4
SR 17 OVER OLD SR 17 AND
HARTWELL RAILROAD CO. RAILWAY

FRANKLIN COUNTY EDS00-0545-00(020)

SCALE: NO SCALE AUGUST 2011

DRAWING NO.	DESIGNED MCM/JL	CHECKED JPT	REVIEWED WMD/WEI
35-06	DRAWN MLF	DESIGN GROUP WEI	APPROVED BFR
BRIDGE SHEET 6 OF 30			

REVISIONS | BY | DATE

1 INCH WHEN PRINTED FULL SIZE

X.DGN

User Name: wcrenshaw Date: 12/15/2012 Time: 11:40:56 AM Filename: g:\tro\63948 - sr 17\bridge\final\63948-ds2.dgn