VOID

USE WITH TYPICAL SECTION NO 16	
ROAD	STATION RANGE
ARROWHEAD RD	STA. 11+20.00 To 114+59.00
HAMMERSTONE RD	STA. 30+42.00 To 30+59.24

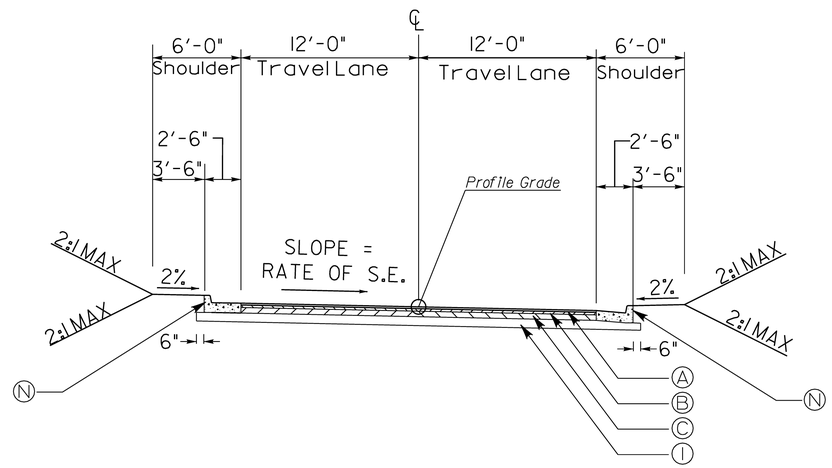

TYPICAL SECTION NO. 16
SUPER ELEVATED SECTION
N.T.S.

REQUIRED PAVEMENT

- (A) 165 LB/SY RECYCLED ASPH CONC 12.5 MM SUPERPAVE, GP 2 ONLY, INCL BITUM MATL & H LIME
- (B) 220 LB/SY RECYCLED ASPH CONC 19 MM SUPERPAVE, GP 1 OR 2, INCL BITUM MATL & H LIME
- (C) 440 LB/SY RECYCLED ASPH CONC 25 MM SUPERPAVE, GP 1 OR 2, INCL BITUM MATL & H LIME
- (I) 10" GRADED AGGREGATE BASE
- (N) 8" X 30" CONC. CURB & GUTTER, TYPE 2

USE WITH TYPICAL SECTION NO 17	
ROAD	STATION RANGE
ARROWHEAD RD	STA. 14+59.00 To 18+62.00
HAMMERSTONE RD	STA. 28+00.00 To 30+42.00

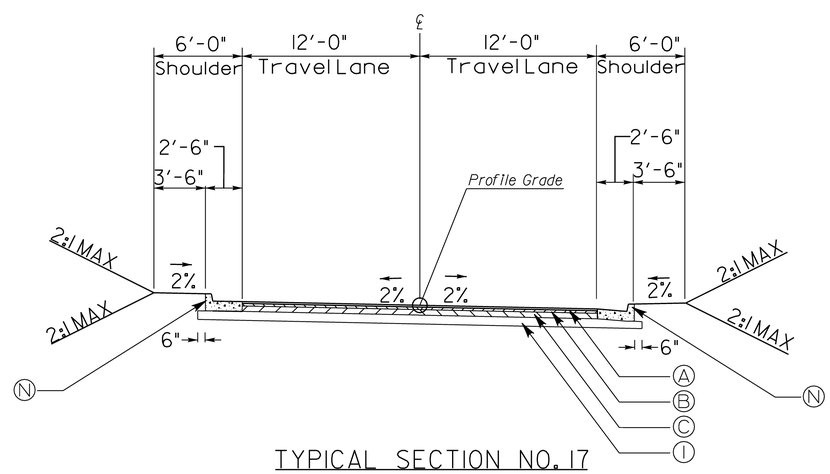

TYPICAL SECTION NO. 17
TANGENT SECTION
N.T.S.

Date: 12/15/2012 User Name: wcrenshaw Job Name: 12210 Time: 9:22:27 AM Filename: g:\tra\63284\rdy\12210ty01.dgn PLOT DRIVER: ustn.pgmeng

ARCADIS
Infrastructure, environment, facilities

REVISION DATES		

GEORGIA
DEPARTMENT OF TRANSPORTATION
TYPICAL SECTION
PROJECT EDS00-0545-00(020)
COUNTY FRANKLIN/
STEPHENS

DRAWING NO. 5—009