STATE	PROJECT NUMBER	SHEET NO.	TOTAL SHEETS
GA.	CM-85-2(176)	81	108

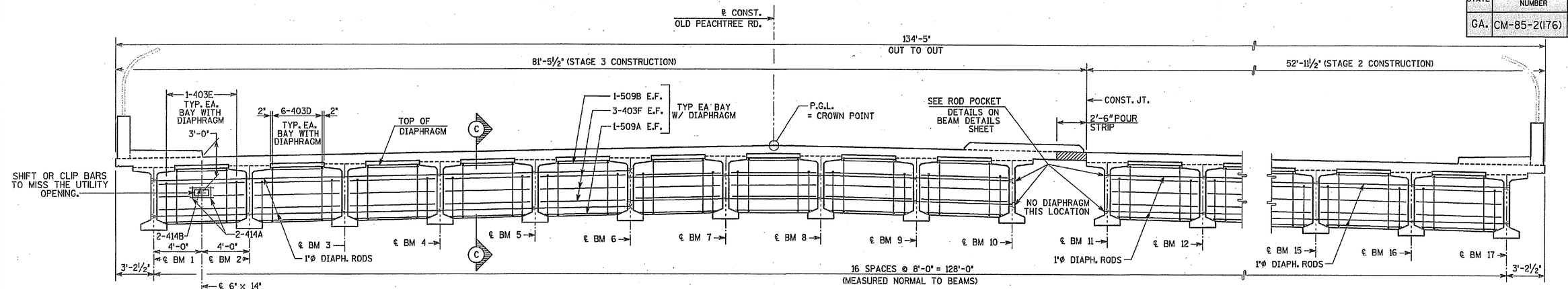

SECTION THRU INT. DIAPHRAGM

SCALE: ¼" = 1'-0"
(LOOKING AHEAD)

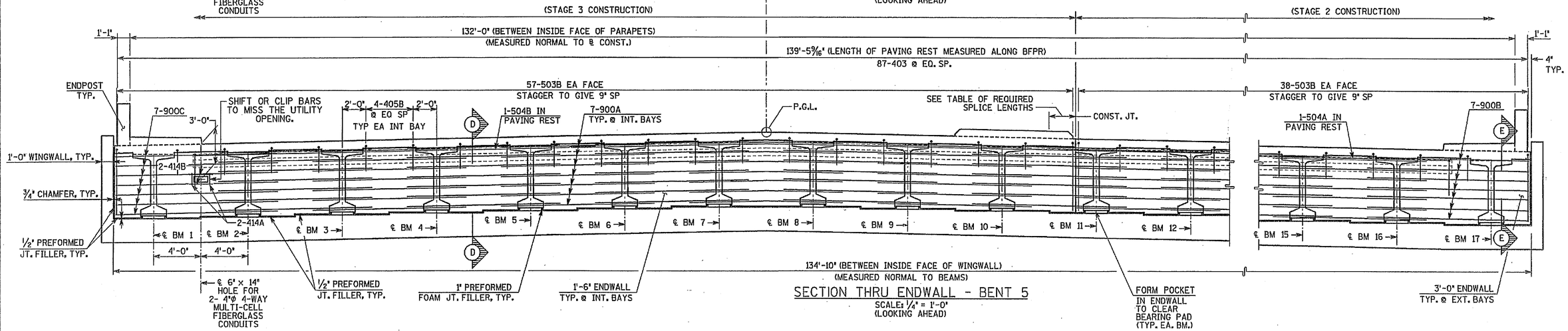

SECTION THRU ENDWALL - BENT 5

SCALE: ¼" = 1'-0"
(LOOKING AHEAD)

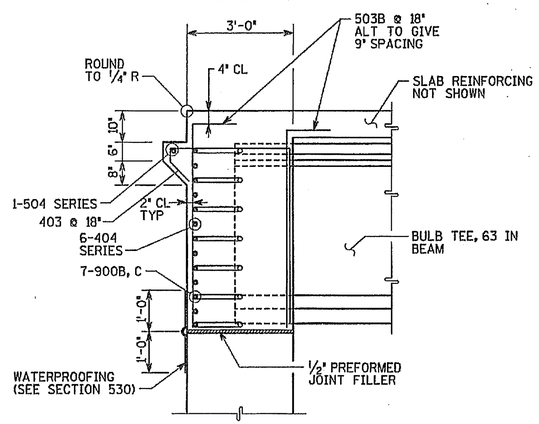

SECTION E-E THRU ENDWALL

SCALE: ½" = 1'-0"

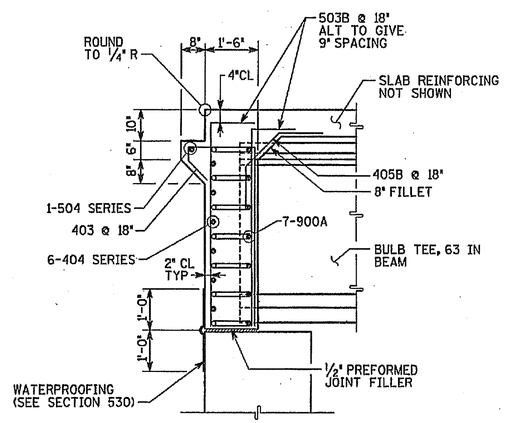

SECTION D-D THRU ENDWALL

SCALE: ½" = 1'-0"

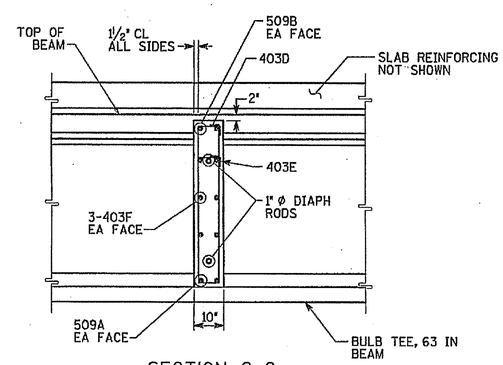

SECTION C-C

SCALE: ½" = 1'-0"

TABLE OF REQUIRED SPLICE LENGTHS	
#4	1'-6"
#5	2'-3"

NOTE:

1. PLACE BARS 503B AND 405B PARALLEL TO BEAMS.
2. MAINTAIN 2" CLEARANCE TO ALL REINFORCEMENT UNLESS NOTED OTHERWISE.
3. 404 SERIES BARS NOT SHOWN.

X281

Moreland Altobelli Associates, Inc.
2211 Beaver Ruin Road, Suite 190
Norcross, Georgia 30071
Tel.: (770) 263-5945

	NAME		NAME		NAME
DESIGNED BY	KAK	DRAWN BY	JTC	QUANTITIES BY	THR
CHECKED BY	OJI	CHECKED BY	KAK	CHECKED BY	
SUPERVISED BY	HISHAM H. DEEB, P.E.			DATE:	DEC. 2000

GEORGIA
DEPARTMENT OF TRANSPORTATION

D.O.T. LIAISON — REVIEWED BY — DATE

Δ	DATE	BY	REVISIONS

OLD PEACHTREE ROAD INTERCHANGE @ I-85
BRIDGE NO. 3 - CR. 14 (OLD PEACHTREE ROAD) OVER I-85
DIAPHRAGM AND ENDWALL SECTIONS AND DETAILS - SPANS 2 - 4

DRAWING NUMBER 3S-11 OF 31

g:\sirru\07530\br\3103-11sd.dgn May. 03, 2001 10:30:50