RELEASED FOR CONSTRUCTION 12/18/2015

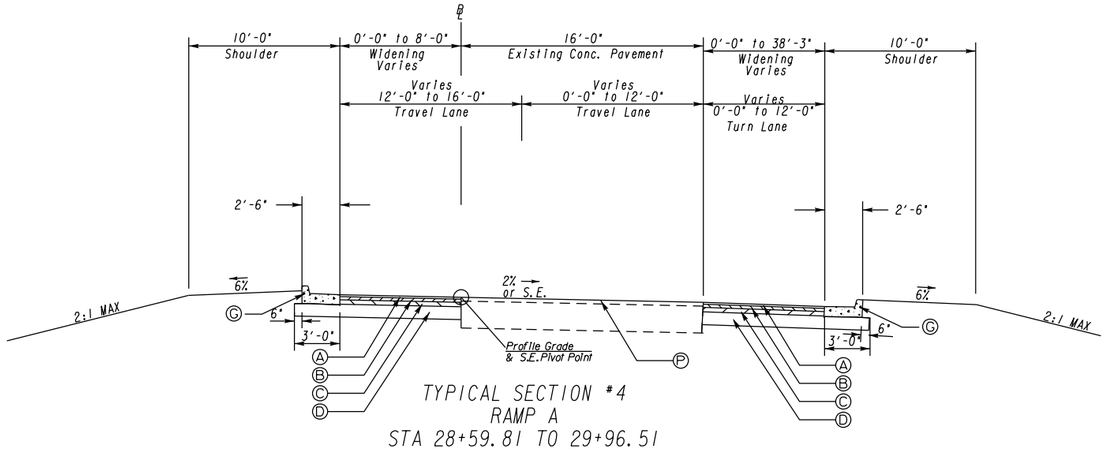

TYPICAL SECTION #4
RAMP A
STA 28+59.81 TO 29+96.51

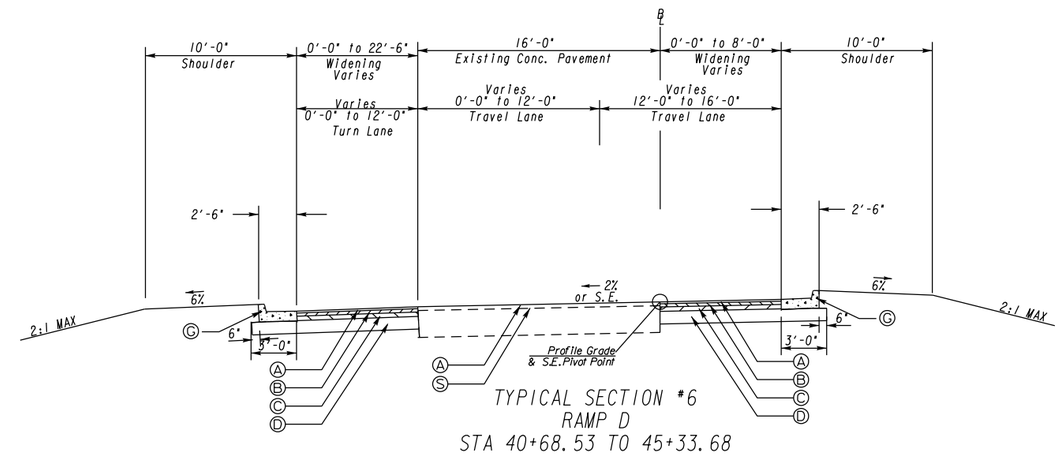

TYPICAL SECTION #6
RAMP D
STA 40+68.53 TO 45+33.68

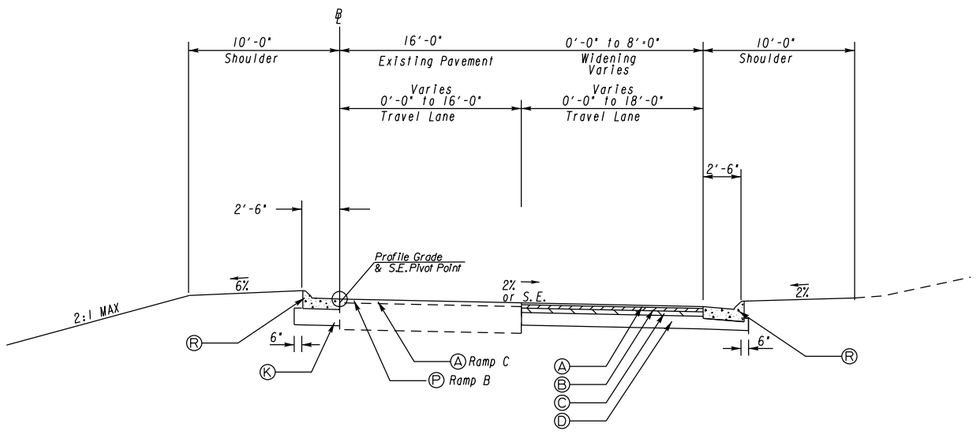

TYPICAL SECTION #5
RAMP B STA 60+91.18 TO 63+55.47
RAMP C STA 2+56.00 TO 3+96.81
(RAMP C LOOKING STA DOWNSTATION)

NOTE: SEE PLANS FOR RAISED ISLAND LOCATIONS
ISLANDS SHALL BE RAISED 6-INCH INTEGRAL MEDIANS
WITH DOWEL BARS IN ACCORDANCE WITH GDOT STD. 9032B

REQUIRED PAVEMENT

- (A) 165 LB/SY RECYCLED ASPH CONC 12.5 MM SUPERPAVE, TYPE II GP 2 ONLY, INCL BITUM MATL & H LIME
- (B) 220 LB/SY RECYCLED ASPH CONC 19 MM SUPERPAVE, GP 1 OR 2, INCL MATL & H LIME
- (C) 770 LB/SY RECYCLED ASPH CONC 25 MM SUPERPAVE, GP 1 OR 2, INCL MATL & H LIME
- (D) 12" GR AGGR BASE
- (E) RECYCLED ASPH CONC LEVELING, INCL BITUM MATL & H LIME, AS REQUIRED
- (F) CONC SIDEWALK, 4 IN
- (G) CONC CURB AND GUTTER, 8 IN X 30 IN, TYPE 2
- (H) CONCRETE HEADER CURB, 6 IN, TYPE 7 W/ DOWEL BARS
- ( ) CONCRETE HEADER CURB, 4 IN, TYPE 9 W/ DOWEL BARS
- ( ) 10" GR AGGR BASE
- ( ) MILL ASPH CONC PVMT, VARIABLE DEPTH
- (N) PLAIN PC CONC PVMT, CL 3 CONC, 9 INCH THK
- (O) POLYMER MODIFIED SYNTHETIC ASPHALT, 1 INCH THK, FEDERAL COLOR CODE #30152
- (P) 330 LB/SY RECYCLED ASPH CONC 12.5 MM SUPERPAVE, W/ POLYMER MODIFIED A/C, GP 2 ONLY, INCL BITUM MATL & H LIME
- (Q) MILL ASPH CONC PVMT, VARIABLE DEPTH
- (R) CONC CURB AND GUTTER, 8 IN X 30 IN, TYPE 7
- (S) MILL ASPH CONC PVMT, 1½ IN DEPTH

NOTE: USE THE FOLLOWING STEPS WHEN OVERLAYING THE EXISTING CONCRETE PAVEMENT AT RAMPS A & B:

1. CLEAN THE EXISTING CONCRETE PAVEMENT SURFACE AND APPLY A 30% LITHIUM NITRATE SOLUTION AT A RATE OF 0.04 GAL/SY.
2. OVERLAY THE LITHIUM TREATED CONCRETE PAVEMENT WITH WATERPROOFING PAVEMENT REINFORCING FABRIC. INSTALL PAVEMENT REINFORCING FULL WIDTH, TYPE 2 USING 0.28 GAL/SY AC TACK COAT PRIMER.
3. APPLY POLYMER-MODIFIED RUBBER SEALANT IN JOINTS/CRACKS EXCEEDING ¼" IN WIDTH.
4. RESURFACE AND LEVEL EXISTING TRAVEL WAY WITH 330 LB/SY OF RECYCLED ASPHALT CONCRETE 12.5 MM SUPERPAVE, W/ POLYMER MODIFIED A/C, GP 2 ONLY, INCL BITUM MATL & H LIME

SCALE IN FEET
0 20 40 80

INFRASTRUCTURE CONSULTING & ENGINEERING

REVISION DATES

STATE OF GEORGIA
DEPARTMENT OF TRANSPORTATION
OFFICE: INNOVATIVE DELIVERY
TYPICAL SECTIONS

DRAWING No. 05-002