TS 1

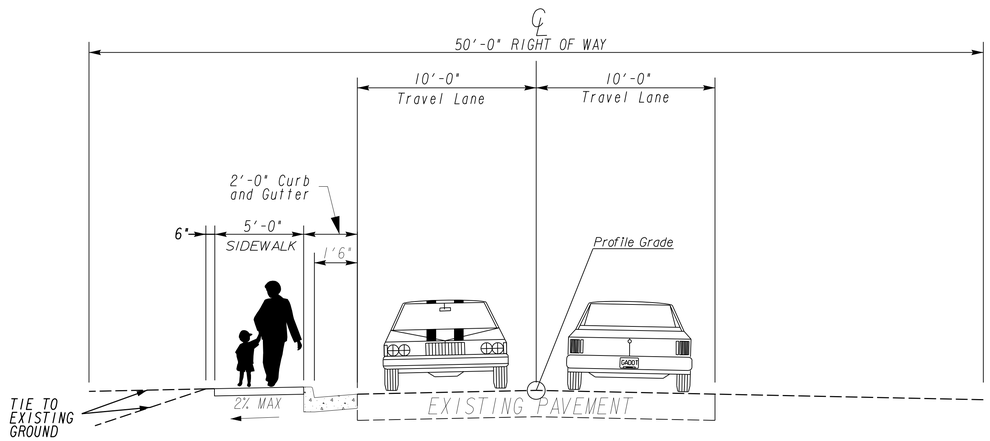

TANGENT SECTION

PARK DRIVE
10+28.83 TO 12+80.00

TS 2

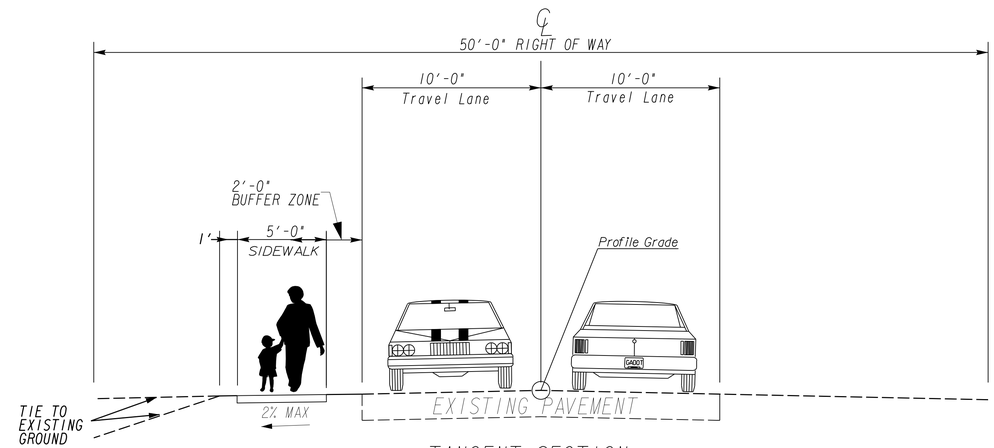

TANGENT SECTION

PARK DRIVE
12+80.00 TO 29+58.57

INSERT FOR SPILLWAY (PARK AVE)

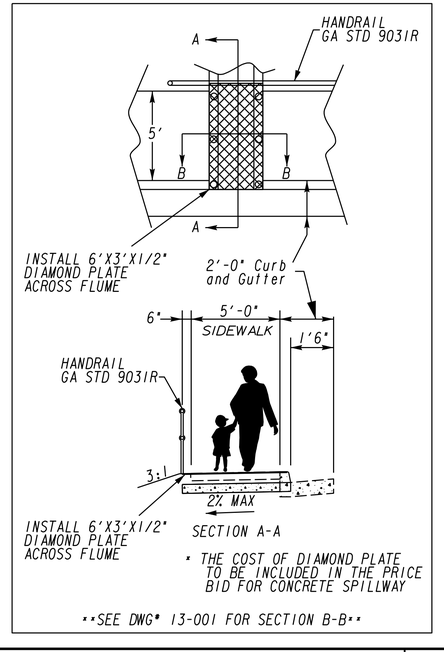

TS 3

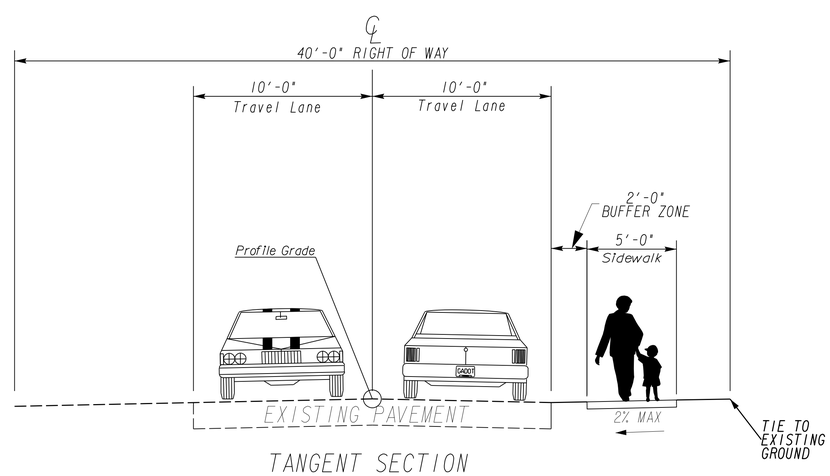

TANGENT SECTION

BERRIEN AVE
40+23.55 42+50.00

GEORGIA
DEPARTMENT OF TRANSPORTATION

REVISION DATES		
4-8-14		

STATE OF GEORGIA
DEPARTMENT OF TRANSPORTATION

OFFICE: DISTRICT 4 DESIGN

TYPICAL SECTIONS

DRAWING No. 05-001