STATE	PROJECT NUMBER	SHEET NO.	TOTAL SHEETS
GA.		077	120

DETAIL FOR PLACING ROOF DRAIN PIPE UNDER SIDEWALK

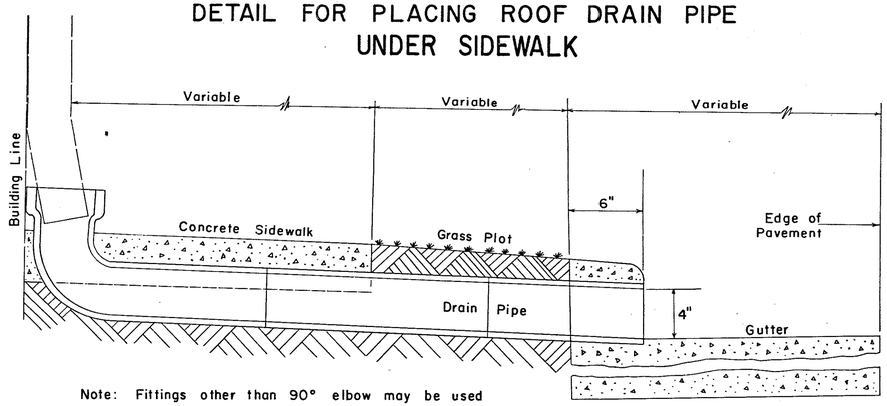

Note: Fittings other than 90° elbow may be used to satisfy other conditions.

DETAIL OF RAMP TYPE BARRICADE

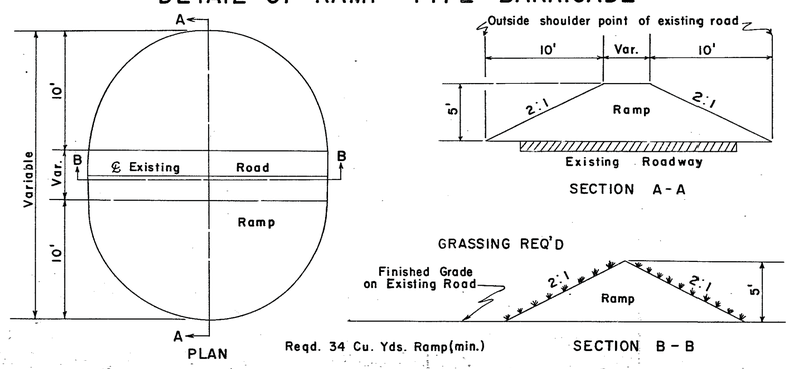

Reqd. 34 Cu. Yds. Ramp(min.)

NOTE: Materials and construction to be in accordance with Standard Specifications

DETAIL OF PIPE HANDRAIL FOR RETAINING WALL

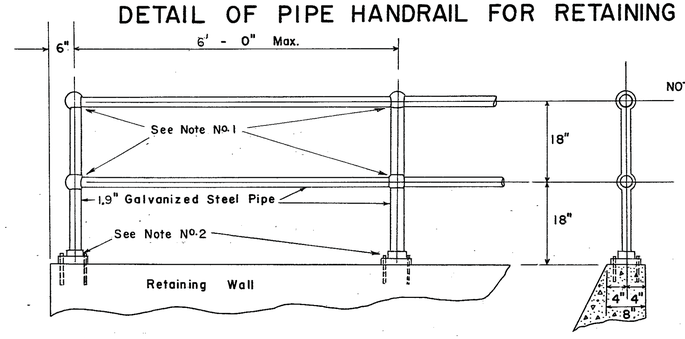

NOTE: If wall is long, and expansion and contraction joints are used in the wall, slip joints are to be provided for in that section of handrailing over the expansion or contraction joint. Stripping the threads in the part of the ball fittings where required to form a slip joint will be permitted.

NOTE: Pipe, pipe fittings, floor flanges and bolts shall be of an approved standard type.

DETAIL OF PIPE HANDRAIL FOR CONCRETE STEPS

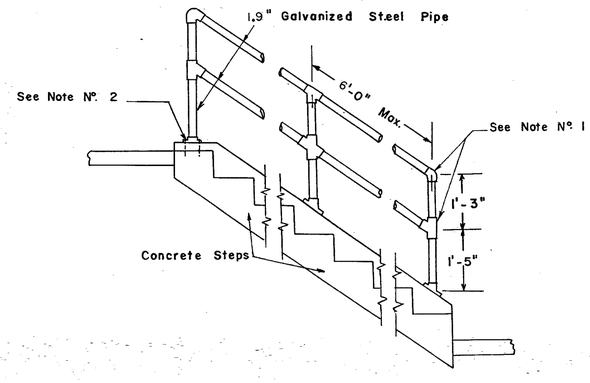

NOTE: PIPE, FITTINGS, FLANGES AND BOLTS SHALL BE OF AN APPROVED STANDARD TYPE.

NOTES FOR PIPE HANDRAILING

1. JOINTS —
   a.) Standard or Special galvanized steel or galvanized iron fittings may be used at joints (as shown).
   — OR —
   b.) Joints may be welded. If welded, all exposed joints shall be finished by grinding or filling to give a neat appearance. All damage to galvanizing shall repaired in accordance with the Ga. Standard Specifications.
2. FOOTINGS —
   a.) Post may be anchored with 2½" x 6½" galvanized Floor Flanges with 4-½" x 9" galvanized bolts (as shown).
   — OR —
   b.) Post may be grouted in 6" deep, 3" diam. hole. Total length of post will be 6" greater than that in details to give same useable height as if Floor Flanges were used.
3. 1.9" (galv. steel pipe) denotes O.D. for rail sections. I.D. = 1½".

BY	REVISIONS	DATE
R.M.U.	Designated 1.9" O.D. Handrail	10-11-88
R.M.U.	Add. Conc. Patch. Detail 8	11-25-75
R.M.U.	Handrail for Conc. Steps	2-11-76
R.M.U.	Rev. Handrailing	2-10-78
R.M.U.	Ramp detail - Rem. Sprig.	

DEPARTMENT OF TRANSPORTATION
STATE OF GEORGIA

STANDARD CONSTRUCTION DETAILS

PLACING ROOF DRAIN PIPE UNDER SIDEWALK
RAMP TYPE BARRICADE
PIPE HANDRAIL FOR RETAINING WALL
PIPE HANDRAIL FOR CONCRETE STEPS

NO SCALE — REVISED: FEB., 1966

DESIGNED: ____
DRAWN: AVS
TRACED: AVS
CHECKED: RBS

SUBMITTED: [signature] STATE ROAD DESIGN ENGINEER
APPROVED: [signature] STATE HIGHWAY ENGINEER

NUMBER 9031R

Dietzgen N. O. 135 "Imperial"