VOID

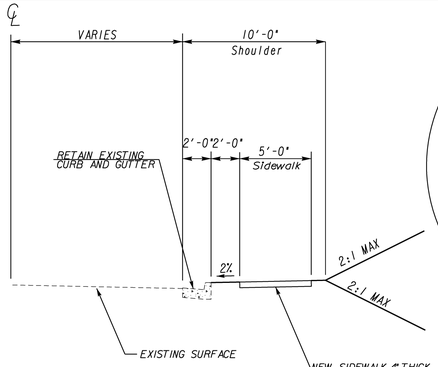

TS-1
STA. 00+69.46 TO 03+11.66
STA. 09+76.22 TO 10+92.68

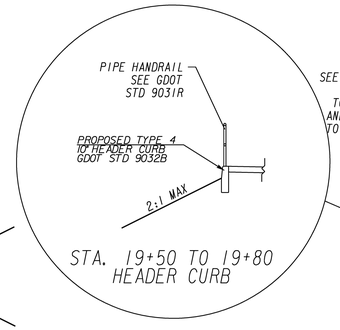

STA. 19+50 TO 19+80
HEADER CURB

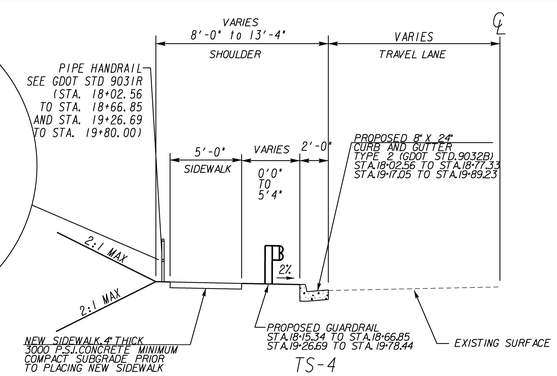

TS-4
STA. 18+02.56 TO 18+66.85
STA. 19+26.69 TO 19+89.23

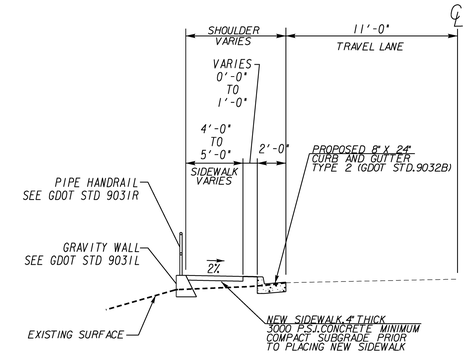

TS-7
STA. 21+30.00 TO 21+90.00

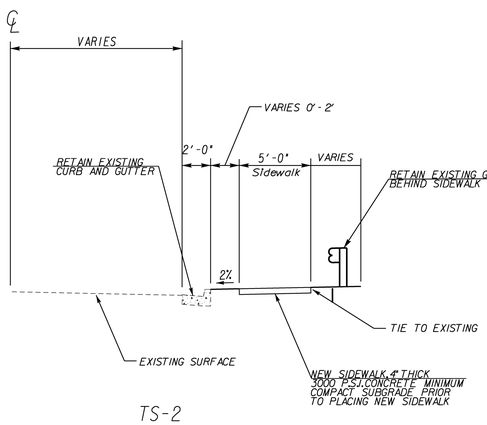

TS-2
STA. 03+11.66 TO 04+83.42
STA. 6+72.74 TO 09+76.22

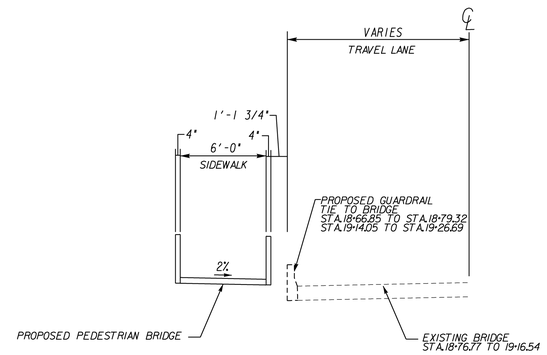

TS-5
STA. 18+66.85 TO 19+26.69

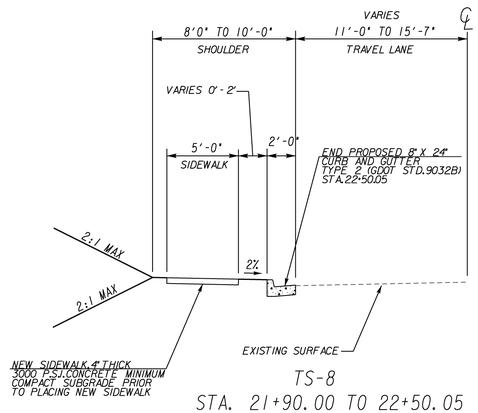

TS-8
STA. 21+90.00 TO 22+50.05

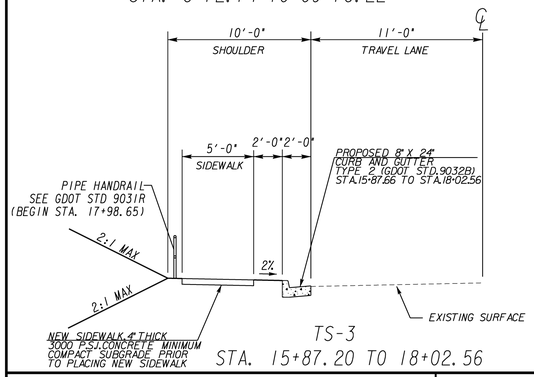

TS-3
STA. 15+87.20 TO 18+02.56

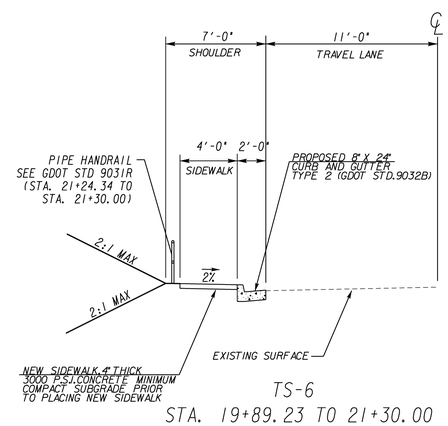

TS-6
STA. 19+89.23 TO 21+30.00

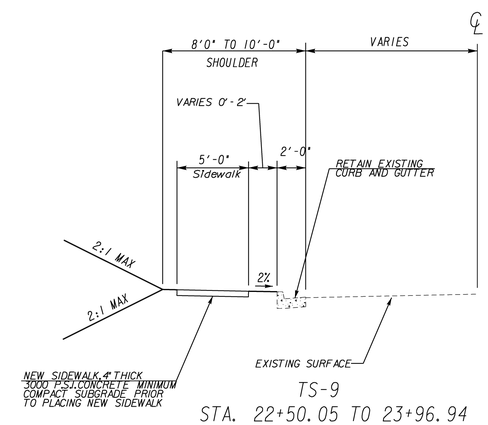

TS-9
STA. 22+50.05 TO 23+96.94

MULKEY ENGINEERS & CONSULTANTS

GEORGIA DEPARTMENT OF TRANSPORTATION

SCALE IN FEET
0 5 10 20

REVISION DATES		

STATE OF GEORGIA
DEPARTMENT OF TRANSPORTATION

OFFICE: INNOVATIVE DELIVERY

TYPICAL SECTIONS

SRTS - COBB
CHEATHAM HILL ELEMENTARY

DRAWING No. 05-001

12/14/2012 GPLN