STATE	PROJECT NUMBER	SHEET NO.	TOTAL SHEETS
GA.	0010400	50	101

NOTE: MIN. 'H' IS BASED ON TYPICAL OUTSIDE DIAMETER OF CONCRETE PIPES AND MAY BE REDUCED SLIGHTLY WHERE SPECIFIED IN THE PLANS, OR AS DIRECTED BY THE ENGINEER.

PIPE SIZE	MIN.(*) H	NORMAL W	75° SKEW W	60° SKEW W	45° SKEW W	MIN. H, IF CIRCULAR ALTER. (STD. 1040) IS USED
15"	3'-0"	2'-0"	2'-0"	2'-6"	3'-0"	3'-10"
18"	3'-6"	2'-6"	2'-6"	3'-0"	3'-6"	4'-3"
24"	4'-0"	3'-0"	3'-0"	3'-6"	4'-0"	4'-9"
30"	4'-6"	3'-6"	4'-0"	4'-0"	5'-0"	6'-2"
36"	5'-0"	4'-0"	4'-6"	5'-0"	6'-0"	6'-9"
42"	5'-6"	5'-0"	5'-0"	5'-6"	6'-6"	7'-4"
48"	6'-0"	5'-6"	5'-6"	6'-0"	7'-6"	7'-11"

(*) FOR LONGITUDINAL PIPE OVER 18" WITH A 2'-0" DITCH, OR A LONGITUDINAL PIPE OVER 36" WITH A 4'-0" DITCH, AN ENLARGED BASE IS REDUCED TO W_1 = DITCH WIDTH WITH APPLICABLE MIN. H IN COLUMN AT EXTREME RIGHT.

PICTORIAL VIEW

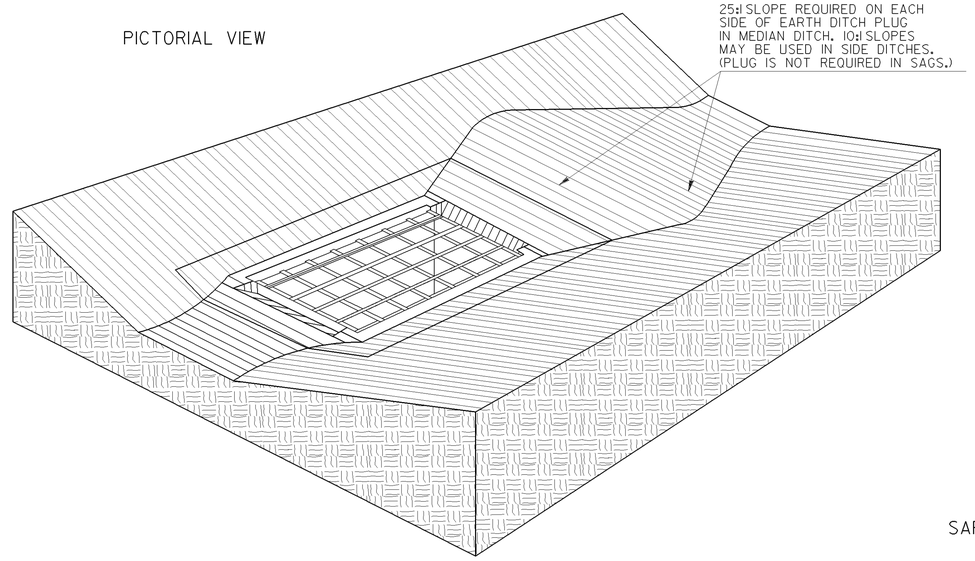

DROP INLET WITH CIRCULAR BASE			
OULET PIPE	ADAPTOR	W X W_1	GRATE SIZE (L. X W.)
TO 18"	TP. 3	2'-0" X 2'-0"	2'-0" X 2'-6"
TO 30"	TP. 2	3'-0" X 2'-0"	3'-0" X 2'-6"

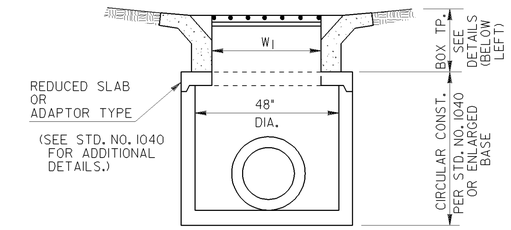

SECTION B-B FOR: CIRCULAR ALTERNATE OR ENLARGED BASE

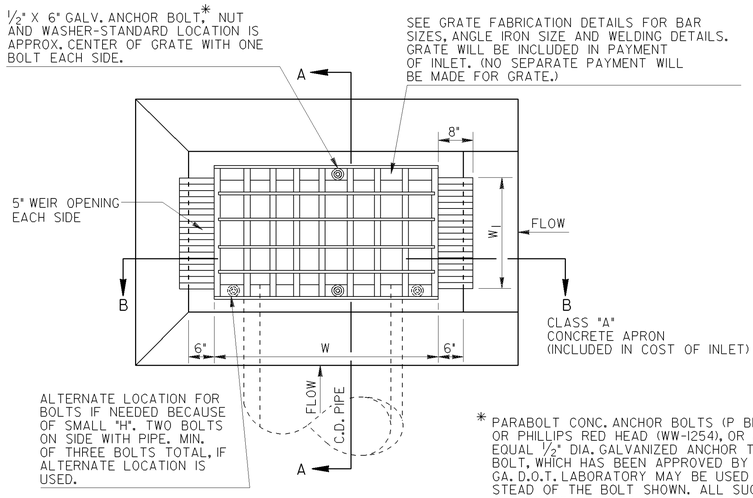

PLAN VIEW

* PARABOLT CONC. ANCHOR BOLTS (P B12-514) OR PHILLIPS RED HEAD (WW-1254), OR AN EQUAL 1/2" DIA. GALVANIZED ANCHOR TYPE BOLT, WHICH HAS BEEN APPROVED BY THE GA. D.O.T. LABORATORY MAY BE USED INSTEAD OF THE BOLT SHOWN. ALL SUCH ALTERNATES ARE TO BE INSTALLED AS RECOMMENDED BY THE MANUFACTURER.

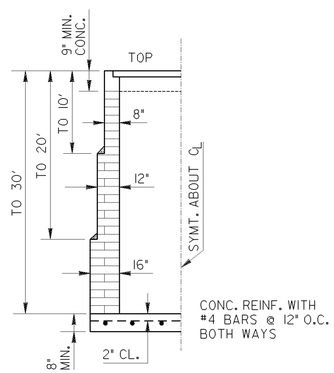

DETAIL OF DEPTH LIMITS FOR BRICK WALL THICKNESS

SAFETY GRATE FABRICATION DETAILS

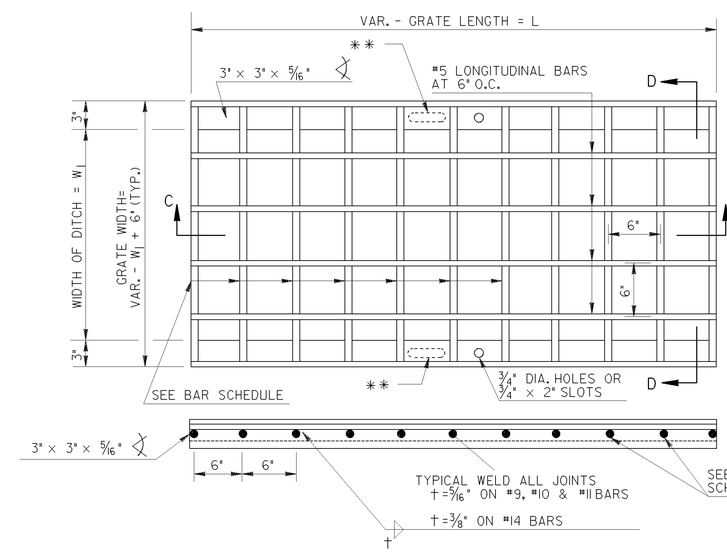

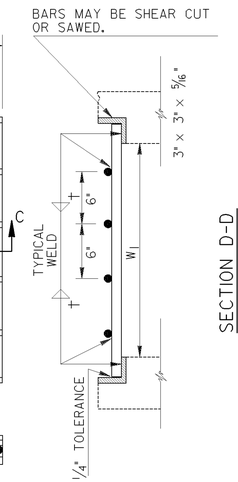

* * ALTERNATE: INSTEAD OF 3/4" DIAMETER HOLE, A 2" × 3/4" OVAL HOLE MAY BE PROVIDED.

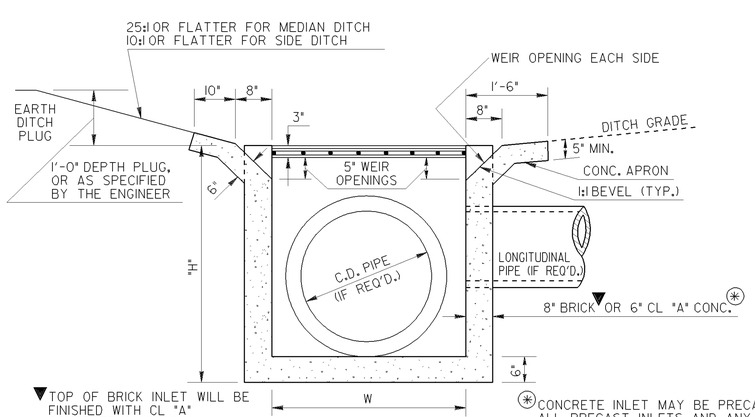

SECTION B-B

▼TOP OF BRICK INLET WILL BE FINISHED WITH CL "A" CONCRETE 9" MINIMUM. 8" BRICK THICKNESS WILL BE INCREASED FOR 'H' OVER 10 FT. (SEE DETAIL IN MIDDLE OF SHT.)

(*) CONCRETE INLET MAY BE PRECAST OR BUILT-IN-PLACE. ALL PRECAST INLETS AND ANY CAST-IN-PLACE CONC. INLETS WITH "H" OVER 4'-6" WILL BE REINFORCED IN ALL SIDES & BOTTOM. REINFORCING FOR BOX INLET WILL BE EITHER #4 BARS AT 12" O.C. BOTH WAYS OR 2/2, 6×6 WELDED WIRE FABRIC. ALL REINFORCING WILL HAVE 2" MIN. COVER.

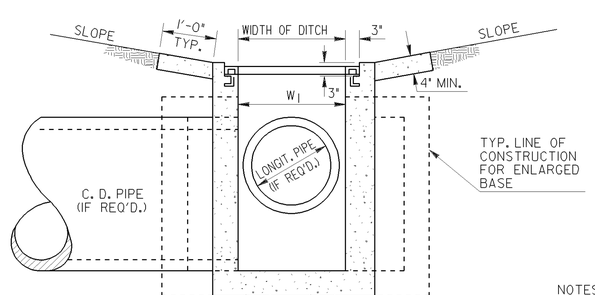

SECTION A-A

BAR SCHEDULE FOR GRATE		
W_1	GRATE TYPE	BAR SIZE
1'-6" TO 2'-0"	1	#9
2'-6"	2	#10
3'-0" TO 3'-6"	3	#11
4'-0" TO 4'-6"	4	#14

NOTES FOR GRATE:
FABRICATOR WILL ARRANGE FOR TESTING BY THE GA. D.O.T. LABORATORY 14 DAYS PRIOR TO FABRICATION.

ALL BARS SHALL MEET THE REQUIREMENTS OF AASHTO M 31 GRADE 60.

ALL LONGITUDINAL BARS WILL BE #5 BARS.

GRATE BAR SPACINGS SHOWN ARE "NOMINAL-MINIMUM" AND MAY BE INCREASED (UP TO 10% TYPICAL) WITH NO ADDITIONAL PAYMENT TO PROVIDE BEST FIT FOR STRUCTURE.

DEPARTMENT OF TRANSPORTATION
STATE OF GEORGIA

DATE | REVISION | BY

CONSTRUCTION DETAILS
DITCH DROP INLET
WITH FABRICATED SAFETY GRATE
AND WEIR OPENINGS

NO SCALE — OCT., 2000

DES. ____ DRW. ____ TRA. ____ CHK. ____
(SUBMITTED) STATE ROAD & AIRPORT DESIGN ENGR.
(APPROVED) CHIEF ENGINEER

NUMBER D-4