STATE	PROJECT NUMBER	SHEET NO.	TOTAL SHEETS
		66	69

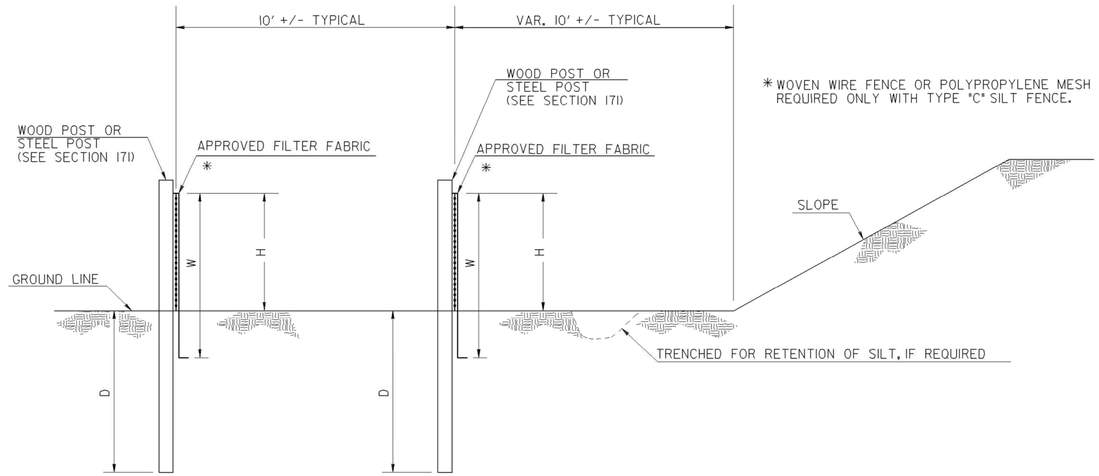

ELEVATION

DOUBLE ROW SILT FENCE

FENCE TYPE	POST LENGTH	H	D	W	TYPICAL USES
TYPE "A"	4 FT.	2'-4"	1'-6"	3'-0"	
TYPE "C"	4 FT.	2'-4"	1'-6"	3'-0"	AT BRIDGE END ROLLS, DOUBLE ROW ALONG STREAMS, WETLANDS AND ENVIRONMENTALLY SENSITIVE AREAS FOR USE OF THIS MATERIAL IN FABRIC CHECKDAMS SEE D-24D.

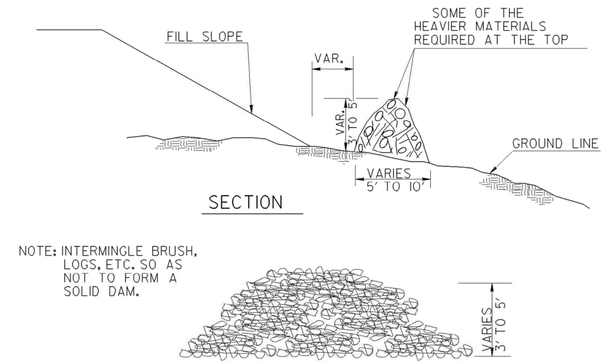

SECTION

FRONT VIEW

NOTE: BRUSH BARRIER(S) WILL BE INCLUDED IN PAYMENT FOR CLEARING & GRUBBING.

BRUSH BARRIER DETAILS

(FOR USE IN RURAL AREAS)

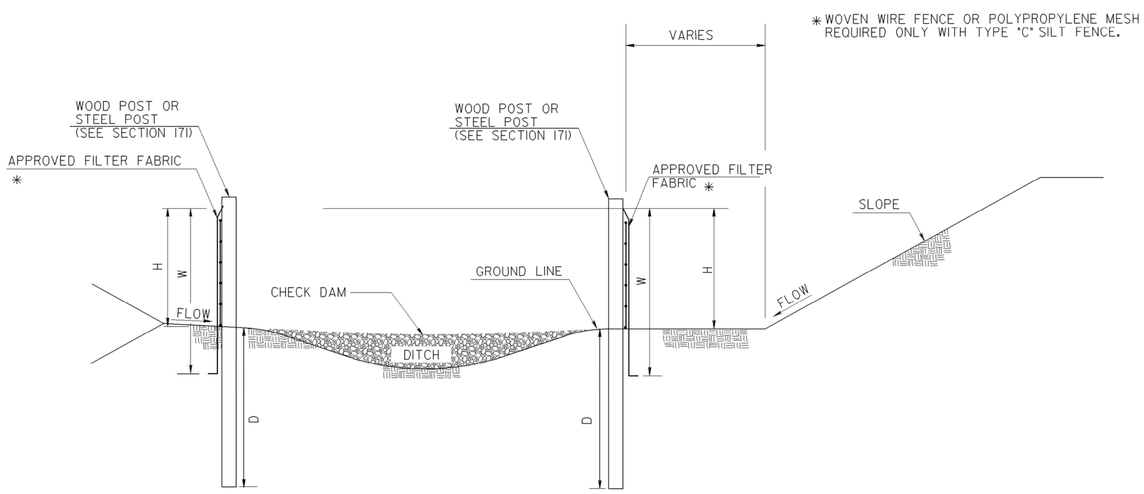

ELEVATION

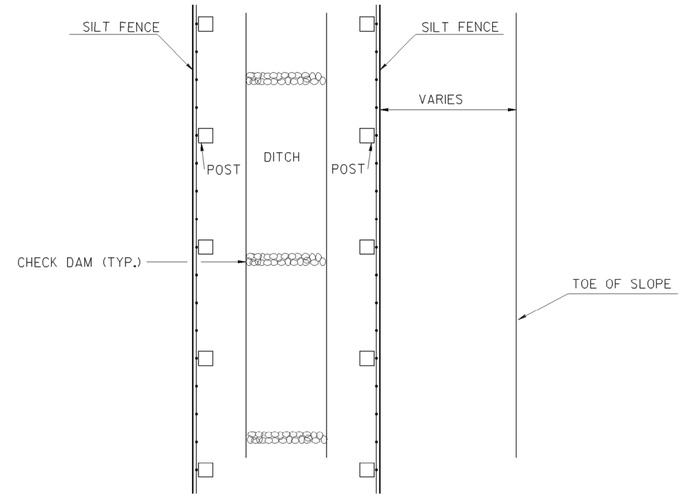

PLAN

NOTE: TEMPORARY SILT FENCE SHALL NOT BE PLACED WITHIN STATE WATERS.

SILT FENCE
PERIMETER INSTALLATION ALONG DITCH SECTION

FENCE TYPE	POST LENGTH	H	D	W	TYPICAL USES
TYPE "A"	4 FT.	2'-4"	1'-6"	3'-0"	
TYPE "C"	4 FT.	2'-4"	1'-6"	3'-0"	AT BRIDGE END ROLLS, DOUBLE ROW ALONG STREAMS, WETLANDS AND ENVIRONMENTALLY SENSITIVE AREAS FOR USE OF THIS MATERIAL IN FABRIC CHECKDAMS SEE D-24D.

DATE	DEPARTMENT OF TRANSPORTATION STATE OF GEORGIA
REVISION	CONSTRUCTION DETAILS TEMPORARY SILT FENCE BERM DITCH, INSTALLATION, BRUSH BARRIER NO SCALE — REV. AND REDRAWN JAN. 2011
BY	NUMBER D-24B (SHEET 2 OF 4)