STATE	COUNTY	PROJECT NUMBER	SHEET NO.	TOTAL SHEETS
GA.	HABERSHAM	0010334	68	100

INDUCTIVE LOOP VEHICLE DETECTOR DETAILS

USING STRANDED COPPER WIRE

PLAN VIEW OF STANDARD LOOP SAW CUTS

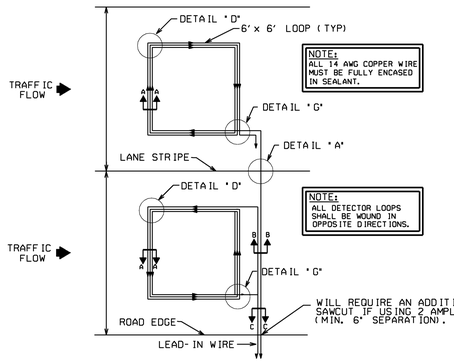

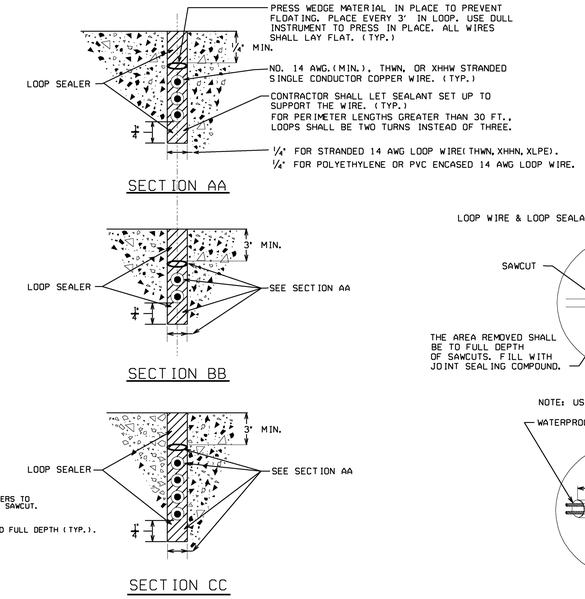

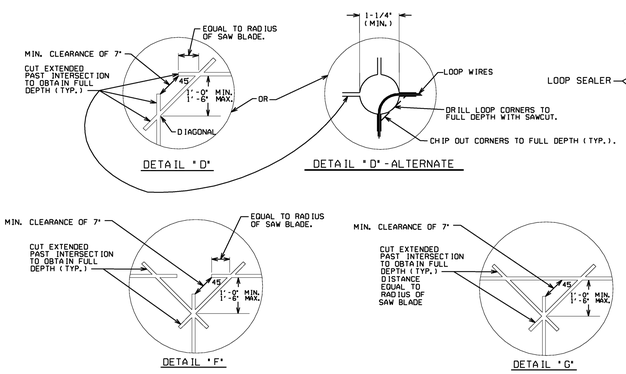

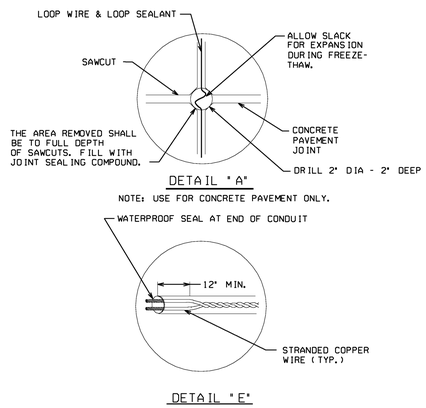

PLAN VIEW OF QUADRUPOLE

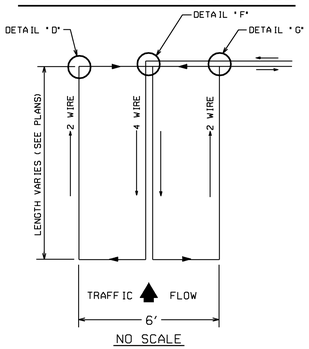

LOOP WIRE CONFIGURATION

THE DOUBLE LAYER CONFIGURATION (2-4-2) SHOWN IS A MINIMUM DESIGN FOR NORMAL INSTALLATIONS WHEN REQUIRED BY THE PLANS.

PLAN VIEW OF STANDARD LOOP

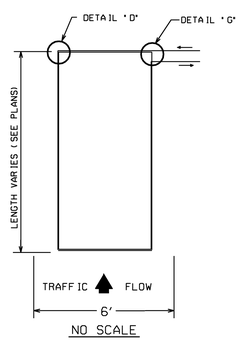

LOOP WIRE CONFIGURATION

THE DOUBLE LAYER CONFIGURATION (2-2) SHOWN IS A MINIMUM DESIGN FOR NORMAL INSTALLATIONS WHEN REQUIRED BY THE PLANS.

TYPICAL CURB DETAIL

(WITH SIDEWALK)

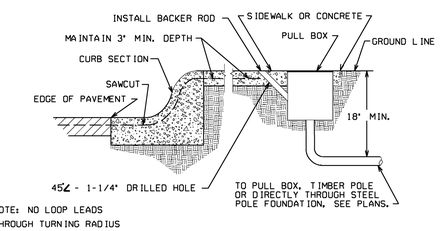

TYPICAL CURB DETAIL

(WITHOUT SIDEWALK)

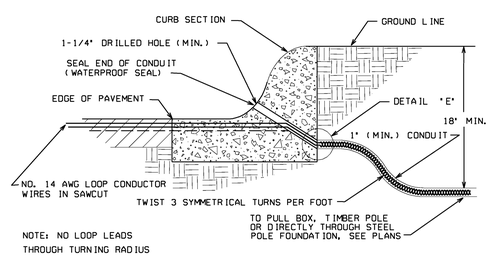

DETAIL WHERE NO CURB EXISTS

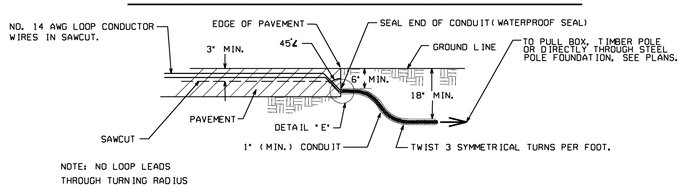

NOTE:
INDUCTIVE LOOPS SHALL NOT BE INSTALLED IN A BRIDGE DECK.
LOOPS MAY BE INSTALLED IN AN APPROACH SLAB.

Guidelines For Usage On Metric Projects

When these details are incorporated into plans and or projects that are being prepared or constructed in metric units, exact or precise conversion to metric units is not required. The dimensions shown that are in feet and inches may be converted to corresponding metric units using the following "Rounded-Off" conversion factors: 1" =25mm, 4" =100mm, and 12" or 1' =300mm. All measurement notes that refer to linear feet and square yards shall be interpreted to mean linear meters and square meters.

PULL BOX-SPLICE DETAILS

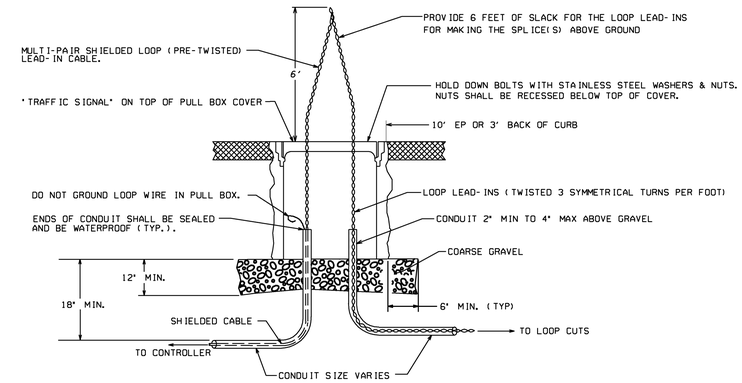

SPLICE DETAILS

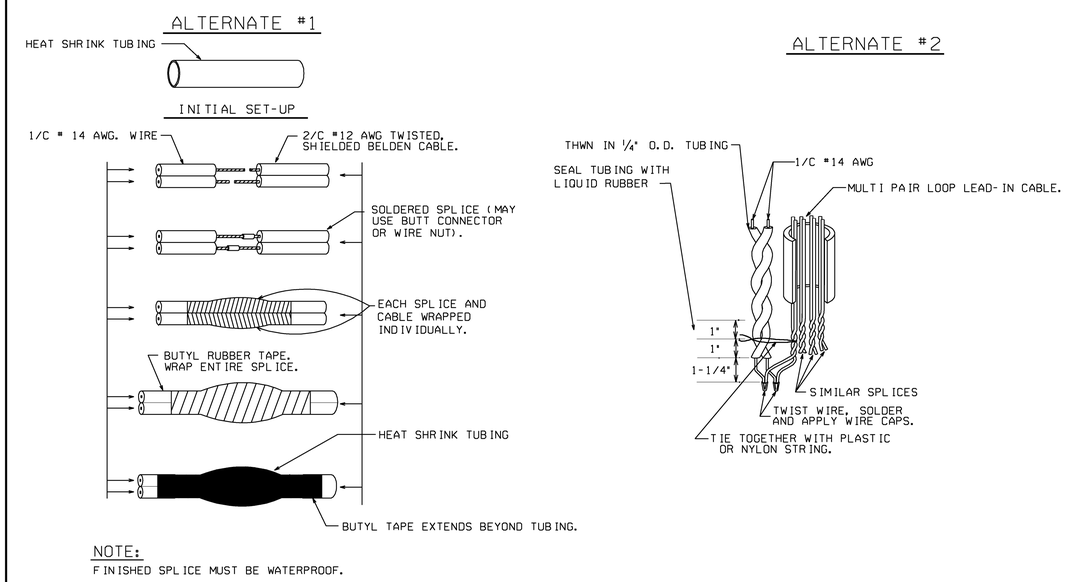

NOTE:
FINISHED SPLICE MUST BE WATERPROOF.

FINISHED SPLICE

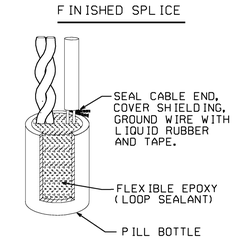

DATE	REVISION DESCRIPTION	REV. BY:

DEPARTMENT OF TRANSPORTATION
STATE OF GEORGIA

TRAFFIC SIGNAL DETAIL

INDUCTIVE-LOOP

DETECTOR INSTALLATION

APRIL 2010

NOT TO SCALE - REPORT ERRORS

DETAIL NUMBER

TS-01