STATE	PROJECT NUMBER	SHEET NO.	TOTAL SHEETS
GA.	0010334	53	100

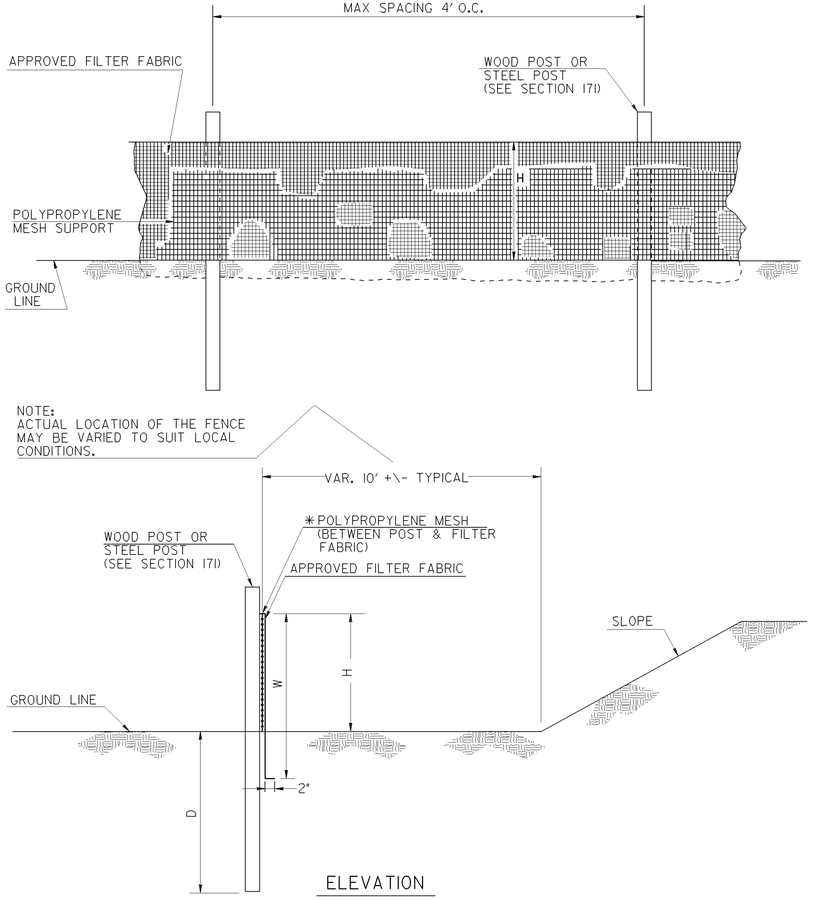

SINGLE ROW TYPE C SILT FENCE WITH POLYPROPYLENE MESH SUPPORT

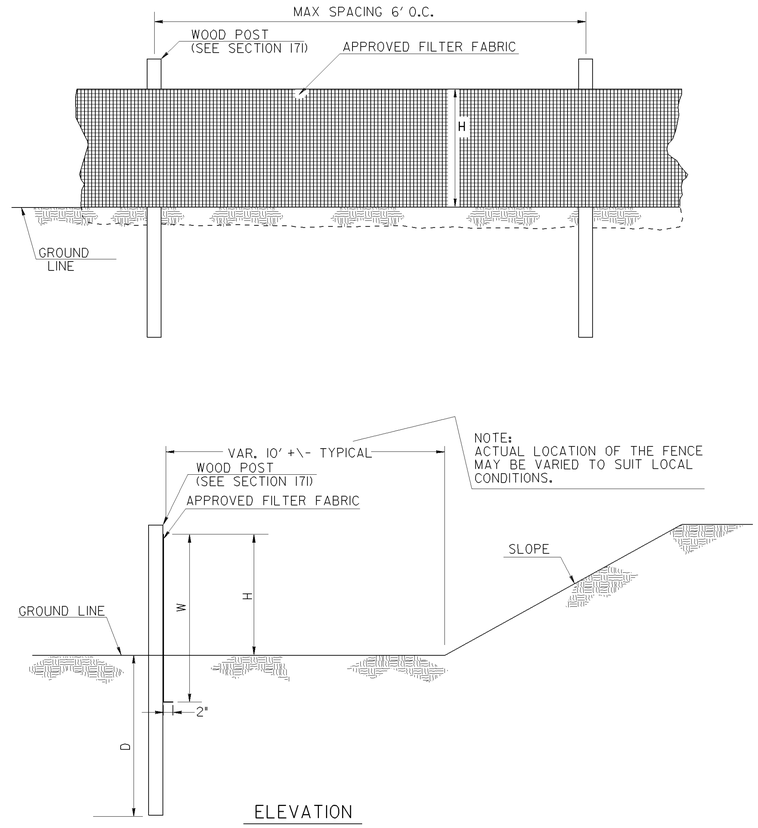

SINGLE ROW TYPE A SILT FENCE

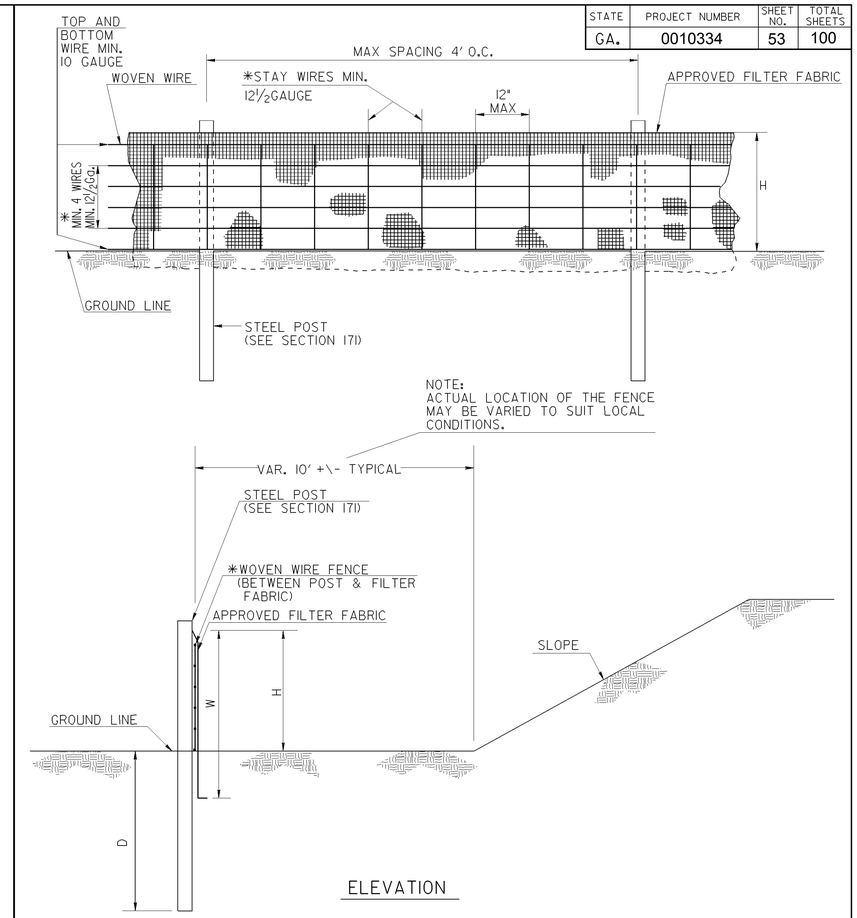

SINGLE ROW TYPE C SILT FENCE WITH WOVEN WIRE SUPPORT

FENCE TYPE	POST LENGTH	H	D	W	TYPICAL USES
TYPE "A"	4 FT.	2'-4"	1'-6"	3'-0"	
TYPE "C"	4 FT.	2'-4"	1'-6"	3'-0"	AT BRIDGE END ROLLS, DOUBLE ROW ALONG STREAMS, WETLANDS AND ENVIRONMENTALLY SENSITIVE AREAS FOR USE OF THIS MATERIAL IN FABRIC CHECKDAMS SEE D-24D.

NOTES:

1. WIRE STAPLES SHALL BE AT LEAST 17 GAUGE, WITH LEGS AT LEAST ½ INCHES LONG AND A CROWN AT LEAST ¾INCHES WIDE. NAILS SHALL BE AT LEAST 14 GAUGE, 1INCH LONG , WITH BUTTON HEADS AT LEAST ¾ INCHES WIDE.
2. NAILS OR STAPLES SHALL BE EVENLY PLACED WITH AT LEAST 5 PER POST FOR TYPE A FENCE AND 4 PER POST FOR TYPE C FENCE.
3. THE VERTICAL WIRES FOR THE WOVEN WIRE SUPPORT FENCE SHALL HAVE A MAXIMUM SPACING OF 12 INCHES. THE TOP AND BOTTOM WIRES SHALL BE AT LEAST 10 GAUGE AND ALL OTHER WIRES SHALL BE AT LEAST 12½ GAUGE.
4. TEMPORARY SILT FENCE INSTALLATION IS DIFFERENT THAN THE SILT RETENTION BARRIER INSTALLATION.
5. SEE SECTION 171 FOR SILT FENCE SPECIFICATIONS.
6. SEE SECTION 894 FOR FENCING SPECIFICATIONS.
7. SEE QPL-36 FOR A LIST APPROVED SILT FENCE FABRIC.
8. TEMPORARY SILT FENCE SHALL NOT BE PLACED WITHIN STATE WATERS UNLESS PERMITTED.

DATE	REVISION	BY

DEPARTMENT OF TRANSPORTATION
STATE OF GEORGIA

CONSTRUCTION DETAILS

TEMPORARY SILT FENCE

NO SCALE

REV. AND REDRAWN JAN. 2011

NUMBER
D-24A
(SHEET 1 OF 4)