STATE	PROJECT NUMBER	SHEET NO.	TOTAL SHEETS
GA.	P.I. 0010126	161B	278

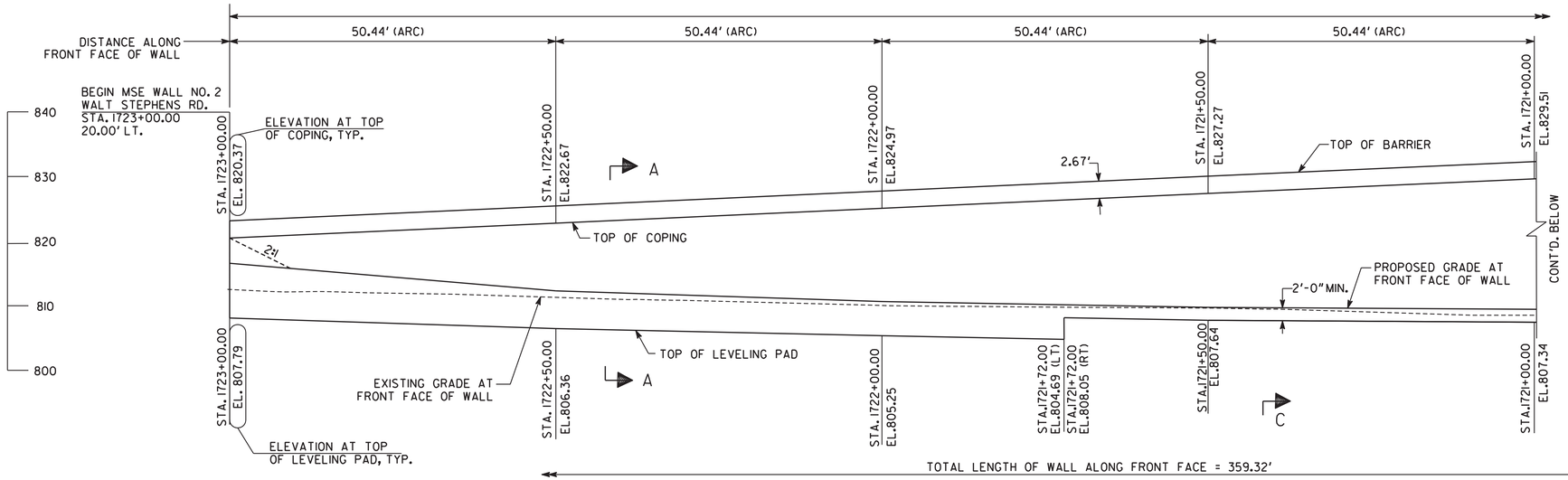

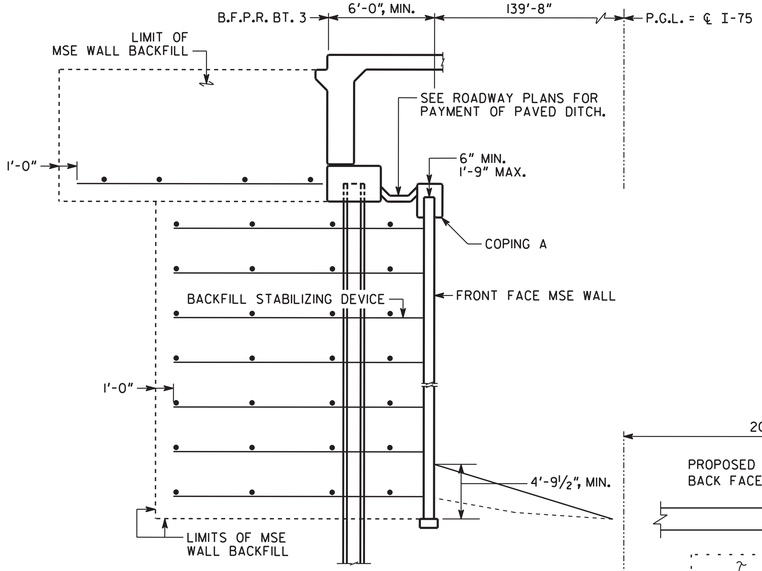

SECTION B-B

N.T.S.

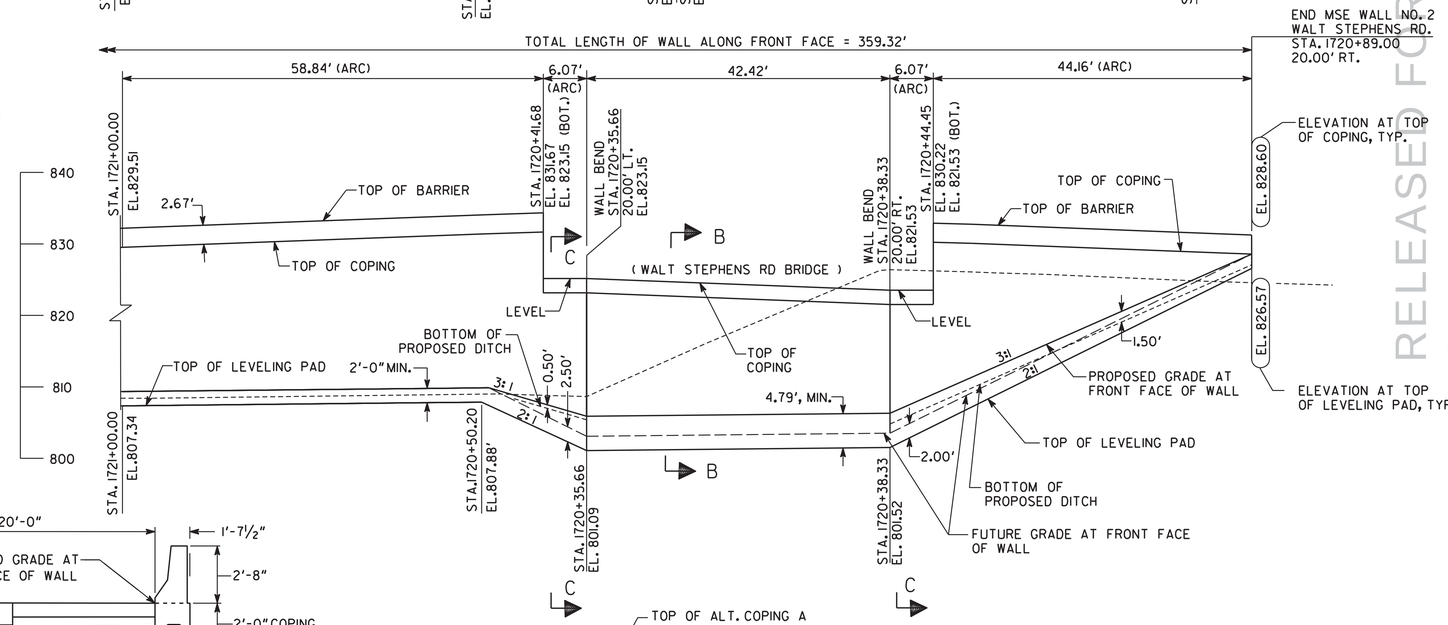

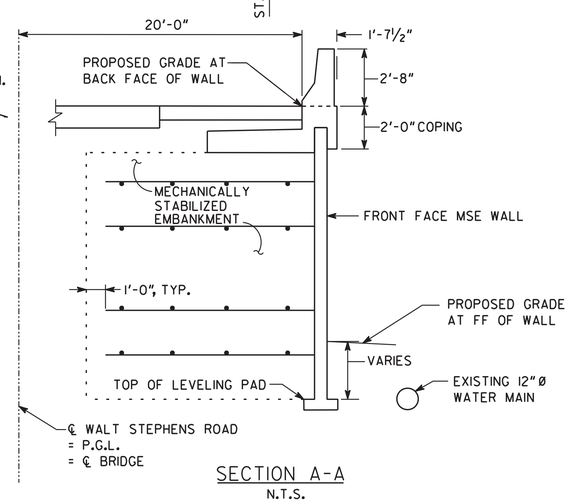

SECTION A-A

N.T.S.

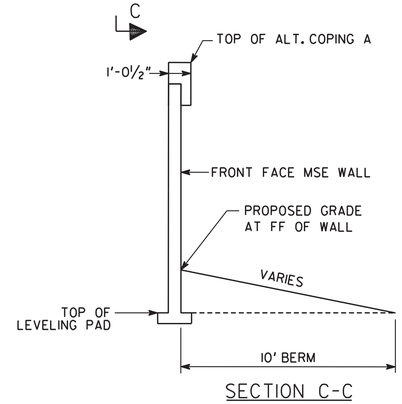

SECTION C-C

N.T.S.

WALL NO. 2

Moreland Altobelli Associates, Inc.
2211 Beaver Ruin Road Suite 190
Norcross, Georgia 30071
Tel.: (770) 263-5945

GEORGIA REGISTERED 13007 PROFESSIONAL ENGINEER JOSEPH P. MCCREN

REVISIONS		DATE
PHASE 2 CONSTRUCTION	JPM	09-12-2012

GEORGIA
DEPARTMENT OF TRANSPORTATION
ENGINEERING DIVISION-OFFICE OF BRIDGES AND STRUCTURES

MSE WALL NO. 2
WALT STEPHENS ROAD OVER I-75
HENRY COUNTY P.I. 0010126

SCALE : 1" = 10'-0" MAY 2012

DRAWING NO. 32-04
WALL SHEET 2 OF 2

DESIGNED	PEP	CHECKED	ENC/GSJ	REVIEWED	WMD
DRAWN	DAW	DESIGN GROUP	SWW	APPROVED	BFR

RELEASED FOR CONSTRUCTION SEPTEMBER 12, 2012

P:\12DB01\STR\Walls\WE02.dgn 9/13/2012 12:08:24 PM