State	Project Number	Sheet No.	Total Sheets
GA	P.I. 0010126	—	—

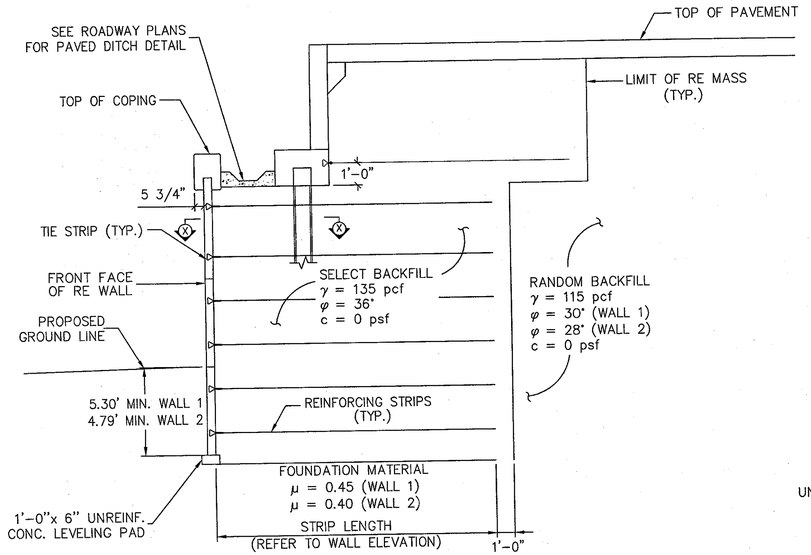

TYPICAL SECTION THROUGH ABUTMENT

SCALE: 1/4" = 1'-0"

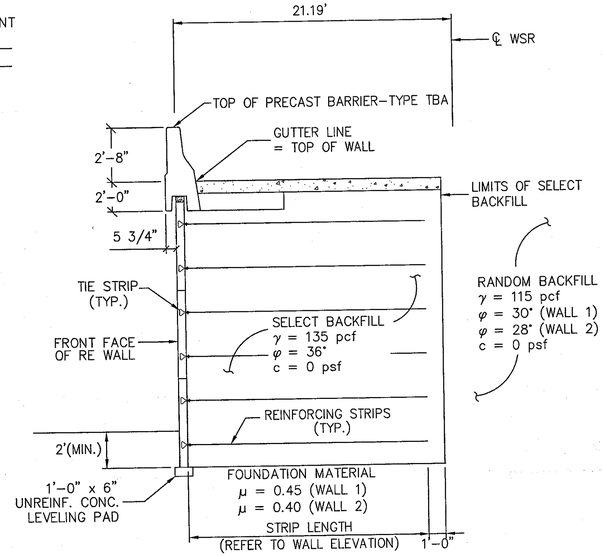

TYPICAL SECTION THROUGH BARRIER @ APPROACH SLAB

SCALE: 1/4" = 1'-0"

NOTE: SECTION AT ASPHALT PAVING SIMILAR EXCEPT PRECAST BARRIER TYPE TBP

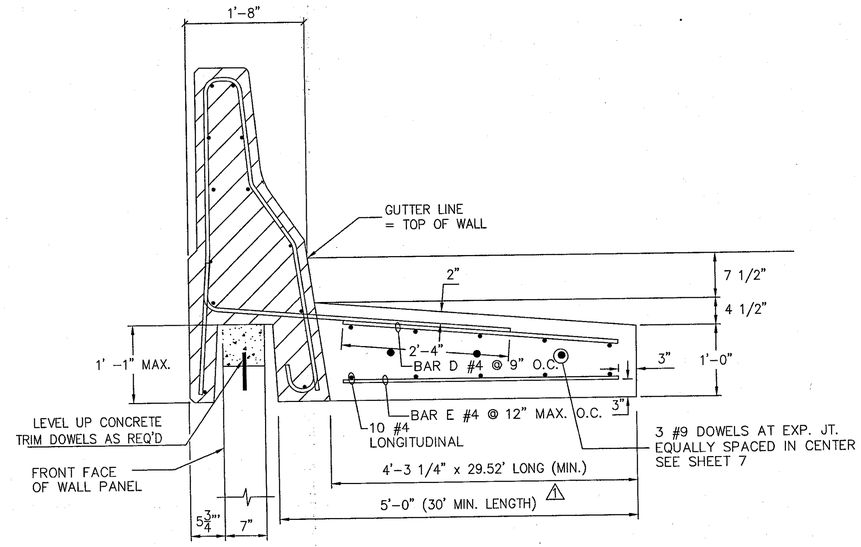

PRECAST TRAFFIC BARRIER TYPE TBP

SCALE: 1" = 1'-0"

DATE: 1/30/13

Approved in general. Details not checked. This approval shall not relieve the Contractor of any responsibility for conformity with the contract Plans and Specifications.

Georgia DOT
Office of Bridge Design
By: DDF

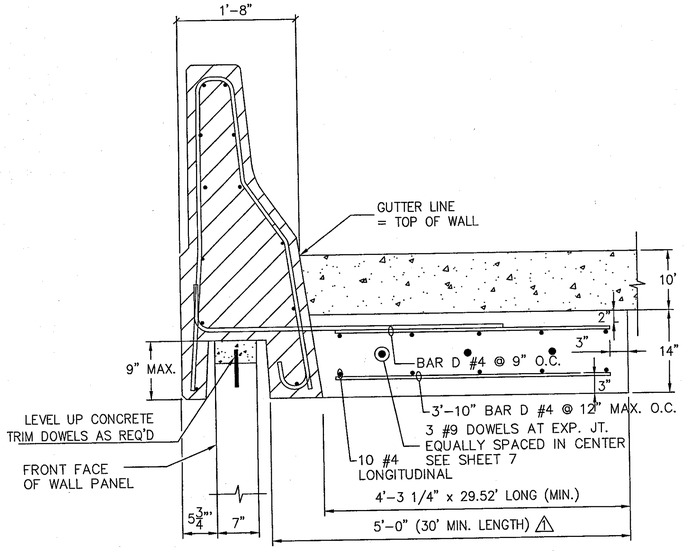

PRECAST TRAFFIC BARRIER-TYPE TBA @ APPROACH SLAB

SCALE: 1" = 1'-0"

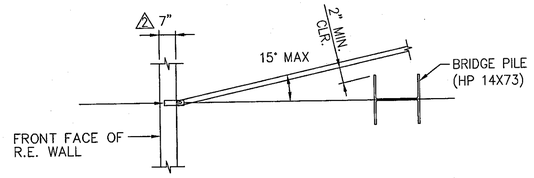

SECTION X-X

SCALE: NONE

NOTE:
CONTRACTOR IS RESPONSIBLE FOR THE STABILITY OF THE PRECAST BARRIER UNTIL THE CONC. SLAB HAS BEEN CAST AND CURED.

FOR PRECAST BARRIER DETAILS, SEE SHEET 8

MATERIAL PROPERTIES FOR CONCRETE & REINFORCEMENT
CONCRETE: f'c = 4,000 PSI MINIMUM AFTER 28 DAYS REINF. STEEL: ASTM A-615 GRADE 60, fy = 60 KSI

BACKWALL TIE STRIP AND REINFORCING STRIP CHART

NAME	LEVEL	QUANTITY	LENGTH	SPACING	Y	DIAGRAMS & NOTES
WALL 1 BR-1 EB-1	1	35	16.0'	1'-2 7/8"	1'-0"	CENTER STRIP GROUP ON BACKWALL.
WALL 2 BR-1 EB-3	1	36	16.0'	1'-2 1/2"	1'-0"	SEE TIE STRIP PLACEMENT DETAIL AT LEFT

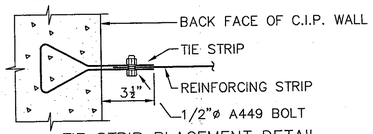

TIE STRIP PLACEMENT DETAIL

SCALE: NONE

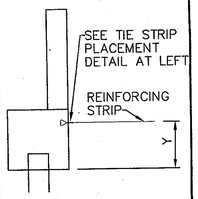

C.I.P. BACKWALL DIAGRAM

This drawing contains information proprietary to The Reinforced Earth Company, and is being furnished for the use of THE GEORGIA DEPT. OF TRANSPORTATION only in connection with this project, and the information contained is not to be transmitted to any other organization unless specifically authorized in writing by The Reinforced Earth Company. The Reinforced Earth Company is exclusive licensee in the United States under patents issued to Henri Vidal, and the furnishing of this drawing does not constitute an expressed or implied license under the Vidal patents.

FINAL FOR REVIEW
SEPTEMBER 28, 2012

PROJECT STATUS

REINFORCED EARTH®
25 Technology Parkway South, Suite 100, Norcross, GA 30092, (770) 242-9415

"REINFORCED EARTH" is the registered trademark of The Reinforced Earth Company.

GEORGIA REGISTERED No. 10711 PROFESSIONAL ENGINEER FRANK W. FORMAN

WALL SHEET OF

REVISIONS	BY	DATE
REVISED BARRIER CALLOUT	SLM	10/12/12
REV. PER MAA COMMENTS	VG	11/28/12

GEORGIA
DEPARTMENT OF TRANSPORTATION
HIGHWAY DIVISION – BRIDGE DESIGN

I-75 NORTH BOUND AUXILIARY LANES
HENRY COUNTY

REINFORCED EARTH RETAINING WALL

TYPICAL SECTIONS & MISC. DETAILS

DESIGNED SLM
DRAWN SLM
TRACED
CHECKED VG
REVIEWED
APPROVED FWF

RE 15619 6 OF 10 9/28/12

Z:\GEORGIA\15619 – I-75 NB Aux Lanes – SQR – E\15619, 06 – TYPICAL SEC (R2 11-28-12).dwg