STATE	PROJECT NUMBER	SHEET NO.	TOTAL SHEETS
GA.	PI 0010126	226	278

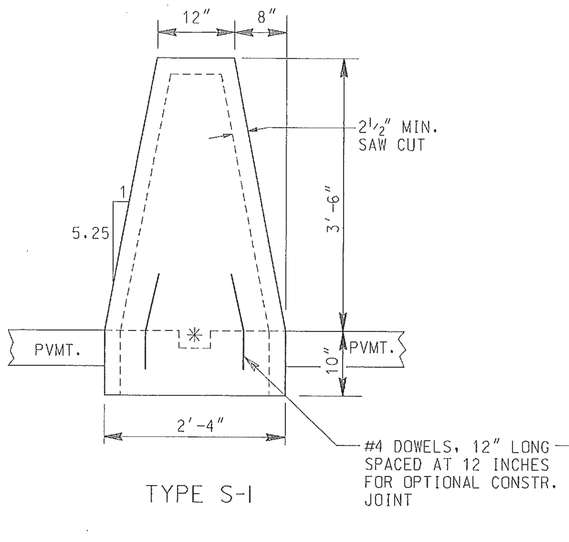

TYPE S-1

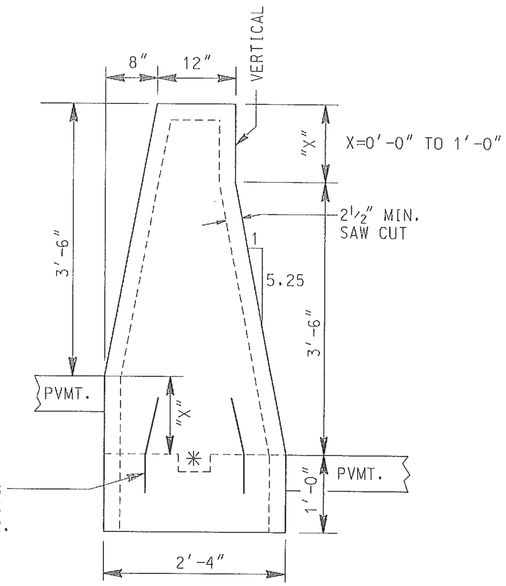

TYPE S-2

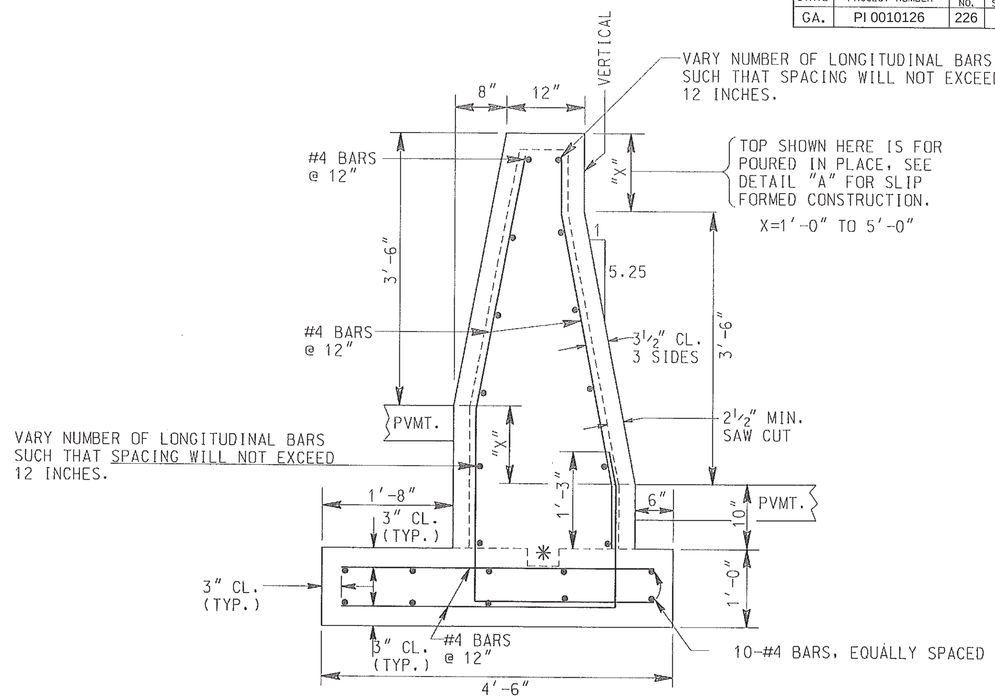

TYPE S-3

*KEYED CONSTRUCTION JOINT (OPTIONAL)
TO BE THE SIZE OF A NOMINAL 2"x4".

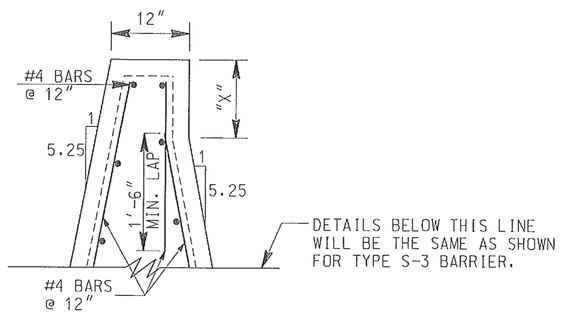

DETAIL "A"

TYPE S-3 (TOP SLIP FORMED)

GENERAL NOTES

1. SPECIFICATIONS: GEORGIA STANDARD, CURRENT EDITION, AND SUPPLEMENTS THERETO.
2. ALL CONCRETE SHALL BE CLASS "A".
3. EXPANSION JOINTS ARE REQUIRED IN ALL BARRIER TYPES AT A MINIMUM SPACING OF 300 FEET WITH A 1" PREFORMED JOINT FILLER. CONTRACTION JOINTS SHALL BE SPACED AT 20 FEET AND MAY BE SAWED.
4. CONSTRUCTION METHODS FOR CONCRETE BARRIERS TP. S-1, S-2 & S-3 SHALL BE THE SAME AS SPECIFIED FOR TYPE 20, TYPE 21 & TYPE 22 (STD. NO. 4940).

DATE	REVISION	BY
3-20-08	REV. BAR & NOTE FOR TYPE S-3.	GLO

DEPARTMENT OF TRANSPORTATION
STATE OF GEORGIA

SPECIAL DESIGN
CONCRETE MEDIAN BARRIERS
TYPES S-1, S-2 & S-3

NO SCALE — REV. & REDR. MAR., 2001

DESIGNED
TRACED
CHECKED
REVISED

NUMBER