STATE	PROJECT NUMBER	SHEET NO.	TOTAL SHEETS
GA.	PI 0010126	202	278

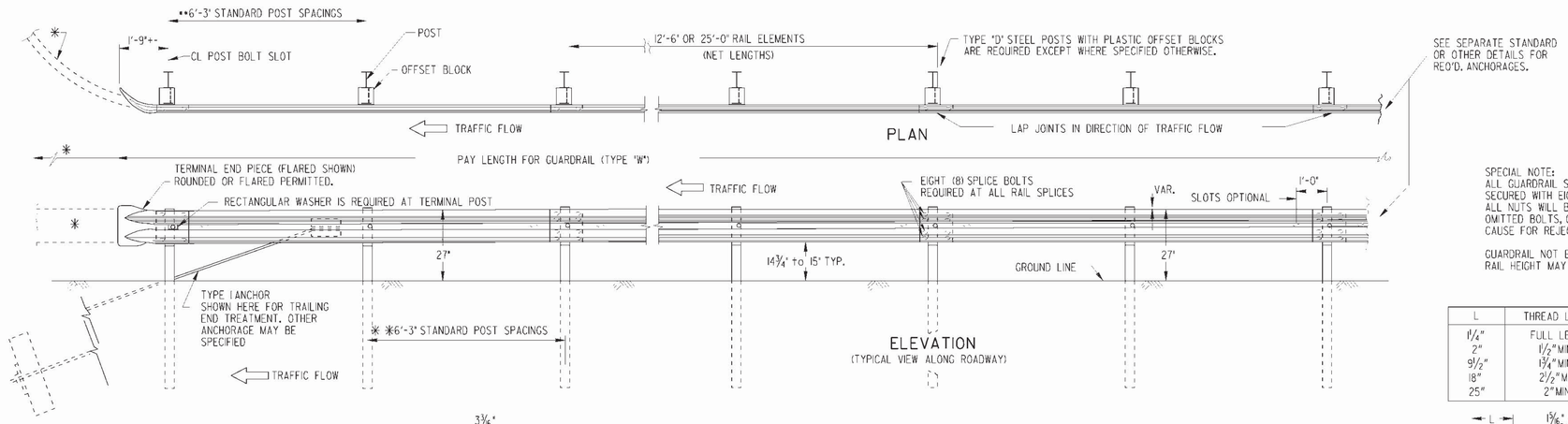

NOTE:
* A PRECURVED GUARDRAIL SECTION WILL BE REQUIRED WHERE TYPE I ANCHORAGE IS PERMITTED AT GUARDRAIL TERMINAL IF TRAFFIC FLOW IS TWO-WAY. SEE APPLICABLE STANDARDS.

** REDUCED POST SPACINGS WILL BE REQUIRED AT TURNOUTS AROUND RADII, AT REDUCED OFFSETS TO FACE OF FIXED OBJECTS OR AT OTHER SPECIFIED LOCATIONS. SEE PLAN DETAILS OR APPLICABLE STANDARDS. PAYMENT FOR GUARDRAIL WILL INCLUDE THE ADDITIONAL POSTS REQUIRED.

SECTION THROUGH RAIL ELEMENT

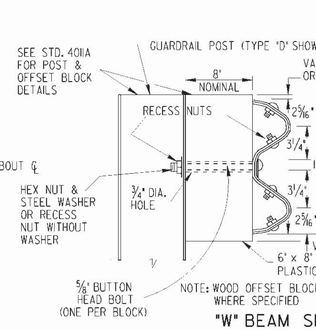

"W" BEAM SPLICE AT POST

NOTE: OFFSET BLOCKS FOE "W" BEAM GUARDRAIL WILL BE PLASTIC EXCEPT WHERE SPECIFIED OTHERWISE.

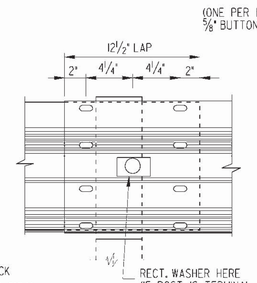

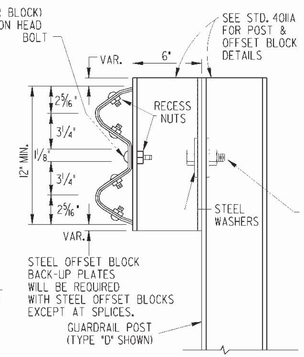

NOTE: STEEL OFFSET BLOCKS ARE NOT PERMITTED ON NEW INSTALLATIONS.

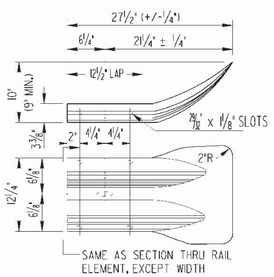

TERMINAL END PIECE (FLARED)

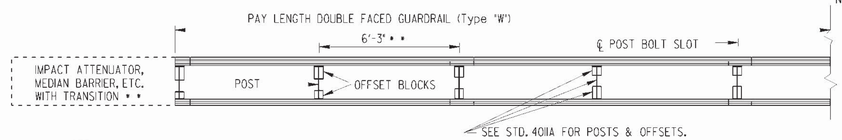

NOTE:
DETAILS FOR DOUBLE FACED GUARDRAIL NOT SHOWN ARE SIMILAR TO THAT SHOWN FOR SINGLE FACED RAIL.

DOUBLE FACED GUARDRAIL (Type "W")

NOTE:
UNLESS SPECIFIED OTHERWISE, ALL REFERENCES TO GUARDRAIL ON STANDARDS AND/OR CONSTRUCTION DETAILS WILL MEAN "W" BEAM GUARDRAIL AS SHOWN ON THIS STANDARD.

SPECIAL END SHOE WILL BE 10 GAUGE STEEL GALVANIZED ACCORDING TO A.A.S.H.T.O. M-111

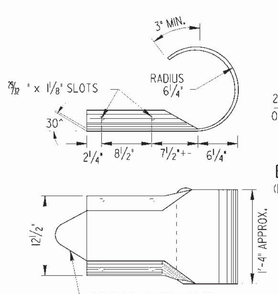

TERMINAL END PIECE (ROUNDED)

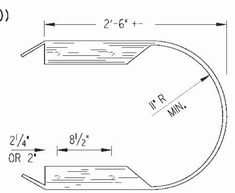

BUFFER END SECTION
(DETAILS NOT SHOWN ARE SIMILAR TO ROUNDED TERMINAL END PIECE.)

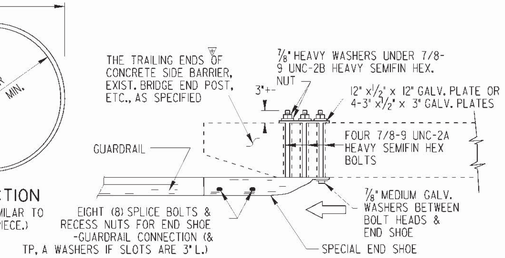

TYPICAL END SHOE CONNECTION

NOTE: THE "W" BEAM RAIL ELEMENT/END SHOE SPLICE SHALL BE LAPPED IN THE DIRECTION OF THE NEAREST TRAFFIC.

⊕ "W" BEAM END CONNECTIONS ARE NOT PERMITTED AT APPROACHES TO CONCRETE STRUCTURES. SEE SEPARATE STANDARDS FOR REQUIRED "T" BEAM CONNECTIONS.

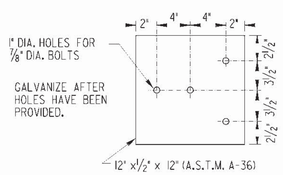

1/2" GALVANIZED STEEL PLATE

(TO BE USED WITH SPECIAL END SHOE CONNECTION UNDER NUTS & WASHERS ON BACK OF BRIDGE END POST OR BACK OF CONCRETE SIDE BARRIER) (FOUR 3" x 1/2" x 3" GALV. PLATES WITH 1" DIA. HOLE CENTERED, MAY BE USED AS AN ALTERNATE)

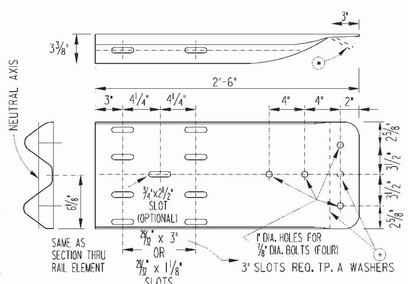

SPECIAL END SHOE DETAIL
(FOR USE IN CONNECTING GUARDRAIL TO BRIDGE END POST, CONCRETE BARRIERS, ETC.)

⊕ APPLIES ONLY TO END SHOE WITH BUFFERED END ASSEMBLY OF ANCHORAGE.

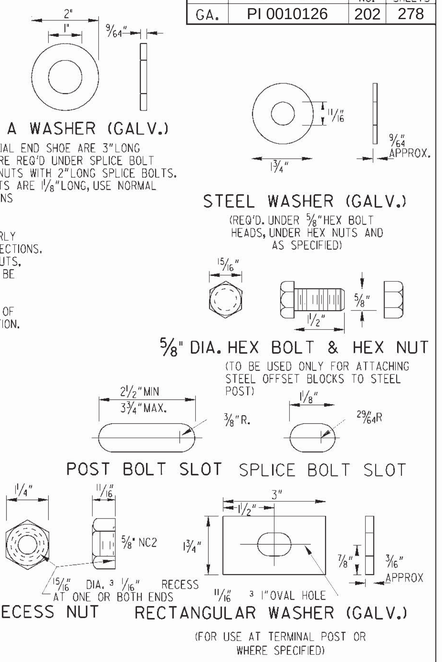

SPECIAL NOTE:
ALL GUARDRAIL SPLICES WILL BE PROPERLY SECURED WITH EIGHT SPLICE BOLT CONNECTIONS. ALL NUTS WILL BE TIGHTENED. LOOSE NUTS, OMITTED BOLTS, OR OMITTED NUTS WILL BE CAUSE FOR REJECTION.

GUARDRAIL NOT ERECTED AT A 27" TOP OF RAIL HEIGHT MAY BE CAUSE FOR REJECTION.

L	THREAD LENGTH
1 1/4"	FULL LENGTH
2"	1 1/2" MIN.
9 1/2"	1 3/4" MIN.
18"	2 1/2" MIN.
25"	2" MIN.

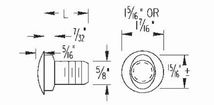

BUTTON HEAD (OR SPLICE) BOLT
(8 REQ'D PER SPLICE)

GENERAL NOTES:

1. SPECIFICATIONS: GEORGIA STANDARD CURRENT EDITION, AND SUPPLEMENTS THERETO.
2. NUTS, BOLTS, WASHERS, RAIL, TERMINAL SECTIONS, END SHOES, BACK-UP PLATES, END SECTIONS AND OTHER GUARDRAIL HARDWARE ARE IN ACCORDANCE WITH THE CURRENT ARTBA TECHNICAL BULLETIN NO. 268 -- UNLESS SPECIFIED OTHERWISE. DIMENSIONS FOR POSTS AND OFFSET BLOCKS WILL BE ACCORDING TO GA. STANDARD 4011A.
3. FOR DETAILS OF GUARDRAIL ANCHORAGES, SEE APPLICABLE STANDARDS AND/OR CONSTRUCTION DETAILS.
4. FOR LOCATION OF GUARDRAIL SEE APPLICABLE LOCATION STANDARDS.
5. ALL STEEL HARDWARE COMPONENTS WILL BE GALVANIZED AFTER FABRICATION. GALVANIZING REPAIR COMPOUND (SEC. 645) WILL BE FIELD APPLIED TO ANY COATINGS DAMAGED.
6. WHEN GUARDRAIL IS REQUIRED ON CURVES WITH RADII LESS THAN 150', PRECURVED RAIL WILL BE REQUIRED.
7. PAYMENT FOR GUARDRAIL (Type "W") TO INCLUDE OFFSET BLOCKS, POST, BACK-UP PLATES WHERE REQUIRED, BOLTS, NUTS, WASHERS, TERMINAL SECTIONS, ADDITIONAL POST WHERE REQUIRED, & REMOVAL AND REPLACEMENT OF PORTIONS OF MEDIAN PAVING, SPILLWAYS, OR CATCH BASINS WHERE NECESSARY.
8. ALL DIMENSIONS ARE SUBJECT TO MANUFACTURING TOLERANCES.
9. STANDARD NET LENGTH OF RAIL ELEMENTS MAY BE EITHER 12'-6" OR 25'-0". THESE LENGTHS SHALL BE ARRANGED TO PROVIDE AS NEARLY AS POSSIBLE THE REQUIRED LENGTH FOR EACH INSTALLATION.

		DATE	DEPARTMENT OF TRANSPORTATION STATE OF GEORGIA
		REVISION	STANDARD "W" BEAM GUARDRAIL
NO SCALE			REV. & REDR. MAY, 1999
DES. ____ RETRACED ____ CHK. ____	BY	(SUBMITTED) STATE ROAD & AIRPORT DESIGN ENGR. (APPROVED) CHIEF ENGINEER	NUMBER 4010