STATE	PROJECT NUMBER	SHEET NO.	TOTAL SHEETS
GA.	PI 0010126	193	278

EXIT RAMPS

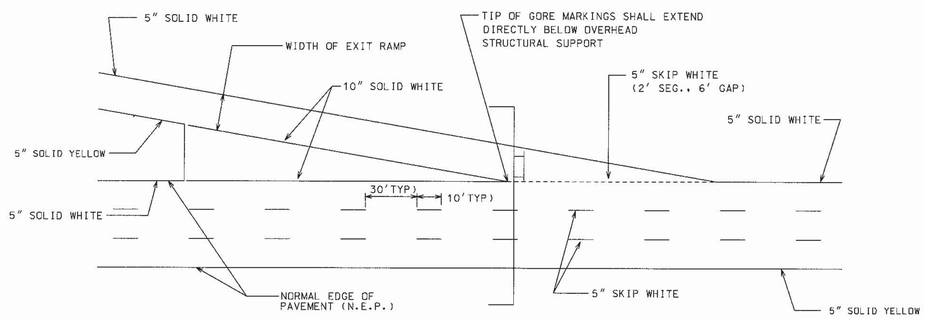

TAPERED DECELERATION LANE

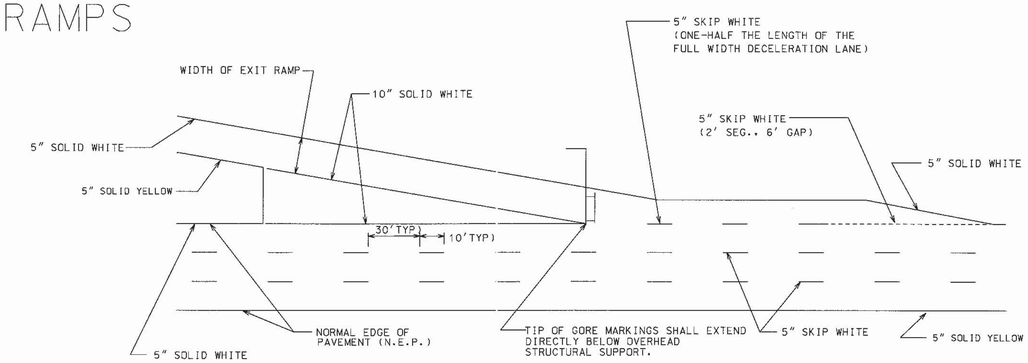

PARALLEL DECELERATION LANE

ENTRANCE RAMPS

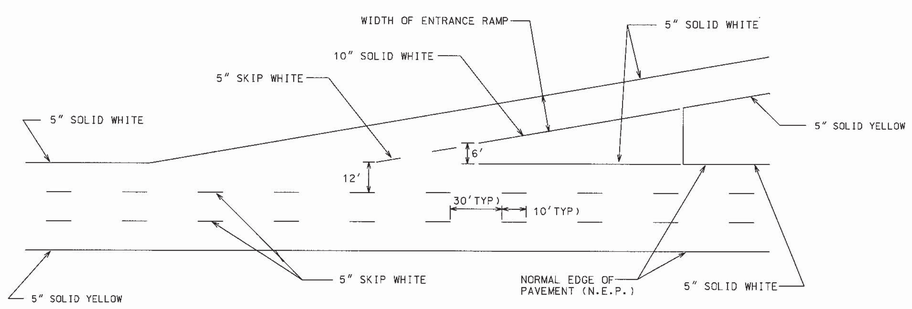

TAPERED ACCELERATION LANE

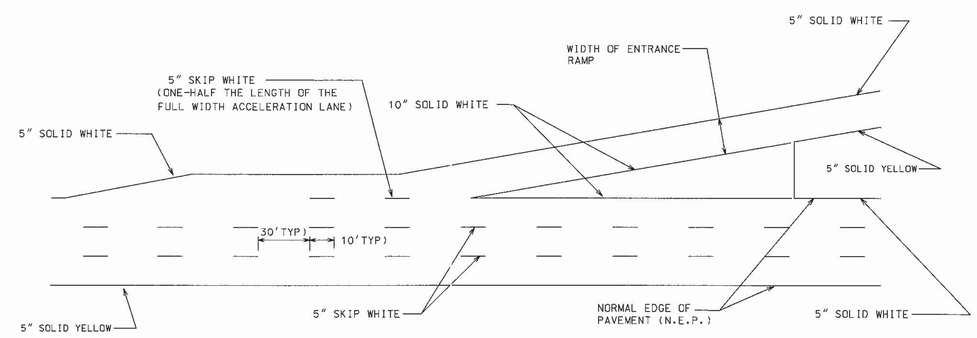

PARALLEL ACCELERATION LANE

GENERAL NOTES:

1. ALL PAVEMENT MARKINGS SHALL BE REFLECTORIZED.
2. EDGE LINES SHALL BE OFFSET 4 INCHES FROM THE NORMAL EDGE OF PAVEMENT.
3. EXISTING PAVEMENT MARKINGS THAT CONFLICT WITH NEW PAVEMENT MARKINGS SHALL BE OBLITERATED OR REMOVED PRIOR TO THE INSTALLTION OF NEW PAVEMENT MARKINGS AS DIRECTED BY THE ENGINEER. NO SEPARATE PAYMENT SHALL BE MADE FOR THIS WORK BUT SHALL BE INCLUDED IN THE UNIT PRICE BID FOR THE NEW PAVEMENT MARKINGS.

DATE	REVISIONS

GEORGIA DEPARTMENT OF TRANSPORTATION
OFFICE OF TRAFFIC SAFETY & DESIGN

DETAILS OF
PAVEMENT MARKING PLACEMENT
LIMITED ACCESS ROADWAY

NO SCALE JANUARY 2000

\\ttfbount\work\dgn\ltaccs Jan 05 2000 16:10:15