STATE	PROJECT NUMBER	SHEET NO.	TOTAL SHEETS
GA.	PI 0010126	179	278

POST SIZE	GAGE FOR BOLTS
W8X24	3½"
W8X31	5½"
W10X33	5½"
W10X39	5½"
W12X40	5½"
W12X45	5½"

△6 CAST-IN-PLACE		
DESIGN HEIGHT "H" △1	ANCHOR DIAMETER "D" △5	BOLT HOLE SIZE
6'	⅜"	9/16"
8'	½"	11/16"
10'	⅝"	13/16"
12'	¾"	15/16"
14'	⅞"	1 1/16"
16'	1"	1 3/16"
18'	1⅛"	1 5/16"
18'-26'	1½" W/PLATE	1 11/16"

NOTES: SOUND BARRIER SHALL NOT BE MOUNTED ON SIDE BARRIERS AS SHOWN IN GA STD 4948.

SOUND BARRIER SHALL ONLY BE ATTACHED TO BARRIERS OR RETAINING WALLS THAT HAVE BEEN SPECIFICALLY DESIGNED FOR THE LOADING FROM SOUND BARRIER.

△6

△5

POST SIZE	PANEL SUPPORT PLATE SIZE *
W8X24,31	4" X 7⅛" X ½"
W10X22	4" X 9⅜" X ½"
W10X26	4" X 9½" X ½"
W10X33,39	4" X 8⅞" X ½"
W12X26	4" X 11½" X ½"
W12X40	4" X 11" X ½"
W12X45	4" X 10⅞" X ½"
W14X30,34,38	4" X 13⅛" X ½"
W14X43	4" X 12⅝" X ½"
W14X48,53	4" X 12½" X ½"
W14X61	4⅞" X 12⅝" X ½"
W14X74,82	4⅞" X 12½" X ½"
W14X90,109	7" X 12⅝" X ½"

* REQUIRED FOR BARRIER MOUNTED SOUND BARRIER ONLY. OPTIONAL FOR GROUND MOUNTED SOUND BARRIER.

△6

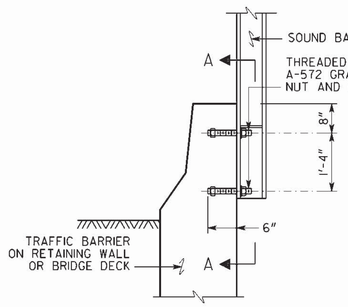

ANCHOR DETAIL FOR SOUND BARRIER BETWEEN 6'-0" AND 18'-0"

CAST-IN-PLACE

△6 △7

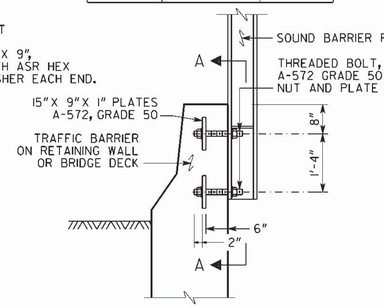

ANCHOR DETAIL FOR SOUND BARRIER BETWEEN 18'-0" AND 26'-0"

CAST-IN-PLACE

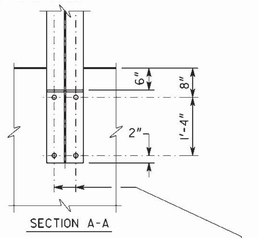

NOTE: MAXIMUM HEIGHT ON BRIDGE = 12'-0"
MAXIMUM HEIGHT ON M.S.E. WALL = 18'-0"

△6 △7

DETAILS FOR BARRIER MOUNTED SOUND BARRIER

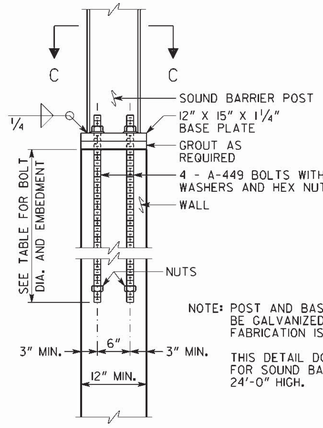

NOTE: POST AND BASE PLATE SHALL BE GALVANIZED AFTER ALL FABRICATION IS COMPLETE.

THIS DETAIL DOES NOT APPLY FOR SOUND BARRIERS OVER 24'-0" HIGH.

DETAILS FOR WALL MOUNTED SOUND BARRIER

10 FOOT POST SPACING

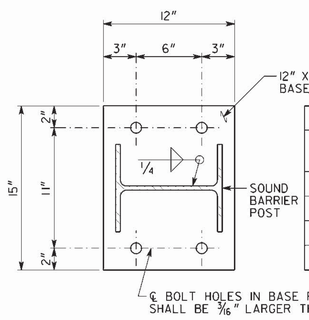

BOLT SIZE		
DESIGN HEIGHT "H"	BOLT DIAMETER	EMBEDMENT
6' TO 10'	¾"	2'-0"
10' TO 14'	1"	2'-6"
14' TO 18'	1¼"	3'-6"
18' TO 24'	1½"	4'-6"

SECTION C - C

SCALE: 2" = 1'-0"

NOTE: SOUND BARRIERS SHALL ONLY BE ATTACHED TO BARRIERS OR RETAINING WALLS WHICH HAVE BEEN SPECIFICALLY DESIGNED FOR THE LOADING FROM THE SOUND BARRIER.

DETAILS FOR WALL MOUNTED SOUND BARRIER

10 FOOT POST SPACING

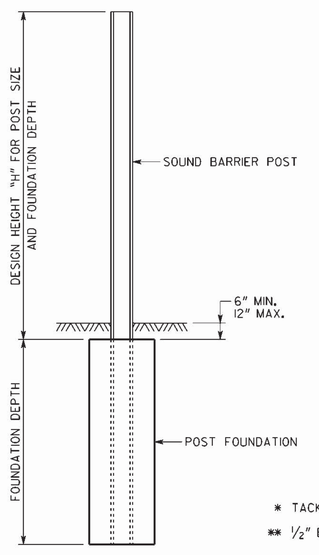

GROUND MOUNTED SOUND BARRIER

SCALE: ⅜" = 1'-0"

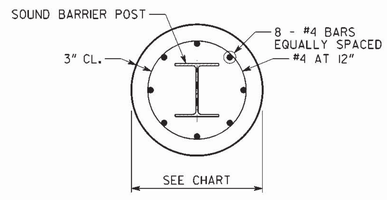

SECTION B - B

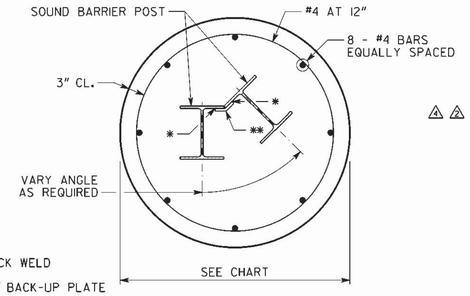

CORNER POST BASE DETAIL

DETAILS FOR GROUND MOUNTED SOUND BARRIER

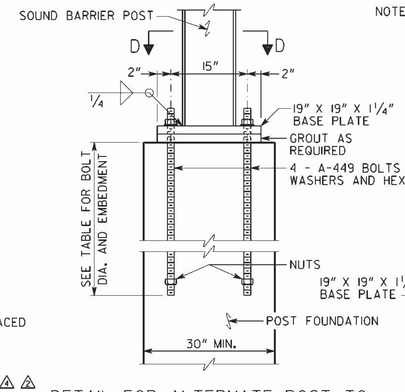

△6 △7

DETAIL FOR ALTERNATE POST TO FOUNDATION CONNECTION DETAIL

10, 15 AND 20 FOOT POST SPACING

NOTE: POST AND BASE PLATE SHALL BE GALVANIZED AFTER ALL FABRICATION IS COMPLETE.

THIS DETAIL DOES NOT APPLY FOR SOUND BARRIERS OVER 24'-0" HIGH.

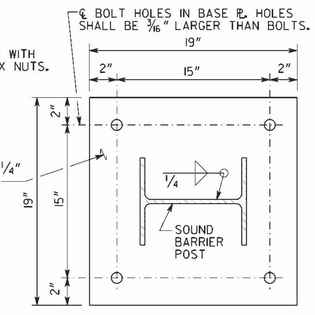

△6 △7 SECTION D-D

SCALE: 2" = 1'-0"

△6 POST BOLTED TO DRILLED SHAFT		
HEIGHT	BOLT Ø	EMBED
6' TO 12'	¾"	2'-0"
12' TO 16'	1"	3'-0"
16' TO 20'	1¼"	4'-6'
20' TO 24'	1½"	6'-0"

REVISIONS	BY	DATE
REMOVED ADHESIVE ANCHOR	SWW	04-10-12
REVISED TABLE AND DETAIL	SWW	11-16-11
REVISED PLATE DETAILS	SWW	03-23-11
REVISED PANEL SUPPORT PLATE	SWW	08-17-08
REVD. TABLES AND DETAILS	SWW	01-08-08
REVD. TABLE AND NOTE	DLC	02-24-05

DEPARTMENT OF TRANSPORTATION

STATE OF GEORGIA

CONSTRUCTION DETAIL

SOUND BARRIER FOUNDATION AND POST DETAILS

SCALE ⅜" = 1'-0" (UNLESS NOTED) MAY 2004

DESIGNED JPT/DLC
DRAWN DLC
CHECKED SWW
DESIGN GROUP SWW

REVIEWED JPT/MCD
APPROVED PVL

NUMBER N-1 B

PAGE 2 OF 2

AS-BUILT PLANS

SOUNDBARRIER.DGN