STATE	PROJECT NUMBER	SHEET NO.	TOTAL SHEETS
GA.	P.I. 0010126	167	278

DIMENSION "D" IS MEASURED FROM TOP OF SLAB TO TOP OF BEAMS AT CENTERLINE BEARING. VARY "D" BETWEEN BEARINGS TO COMPENSATE FOR DEAD LOAD DEFLECTION AND VERTICAL CURVE. MAINTAIN A CONSTANT SLAB THICKNESS OF 8¼" BETWEEN BEAMS AND OVERHANG

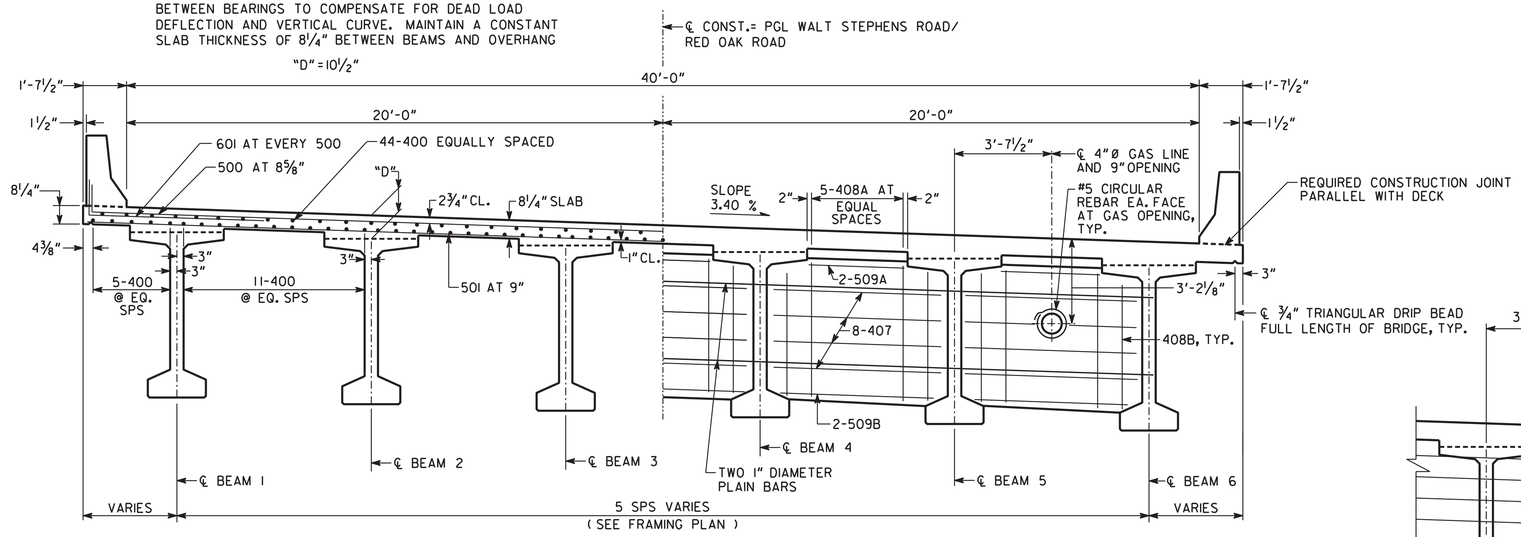

HALF-SECTION THRU SLAB

HALF-SECTION THRU DIAPHRAGM

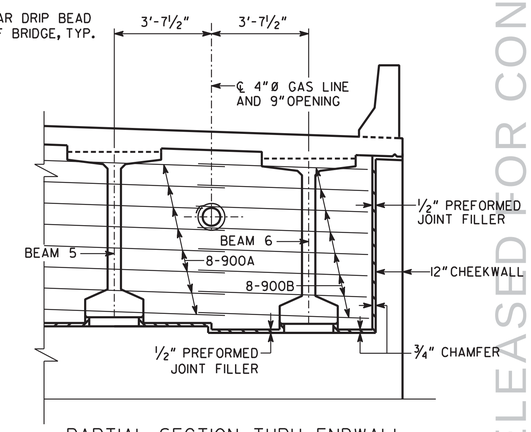

PARTIAL SECTION THRU ENDWALL TO SHOW GAS MAIN

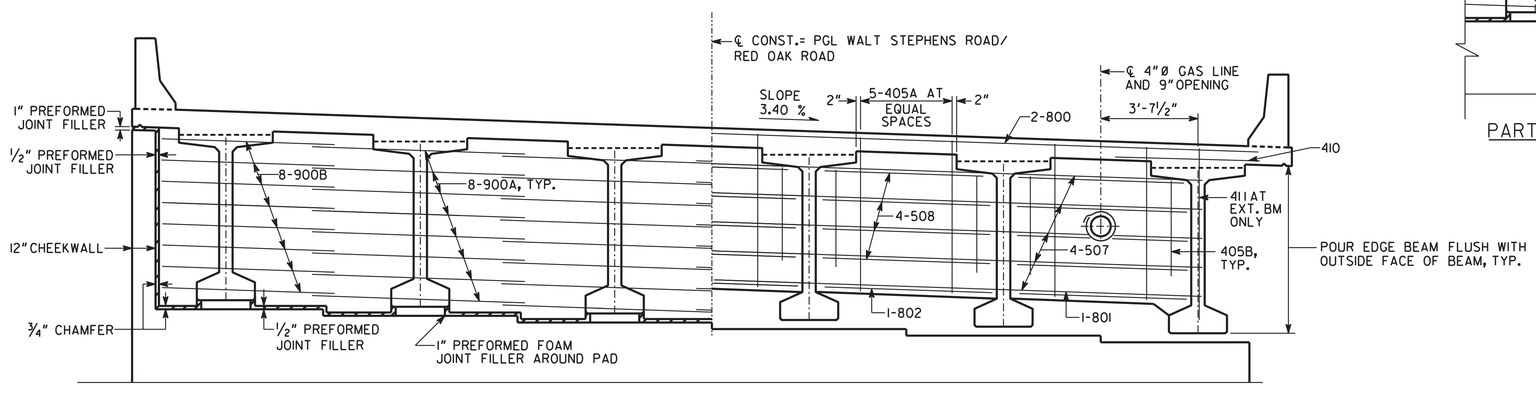

HALF-SECTION THRU ENDWALL

HALF-SECTION THRU EDGE BEAM

NOTE:

- MAINTAIN 2" CLEARANCE ON ALL REINFORCEMENT UNLESS OTHERWISE NOTED.
- CLIP OR BEND REINFORCEMENT TO MAINTAIN 2" MIN. CL. AROUND GAS LINE OPENING.

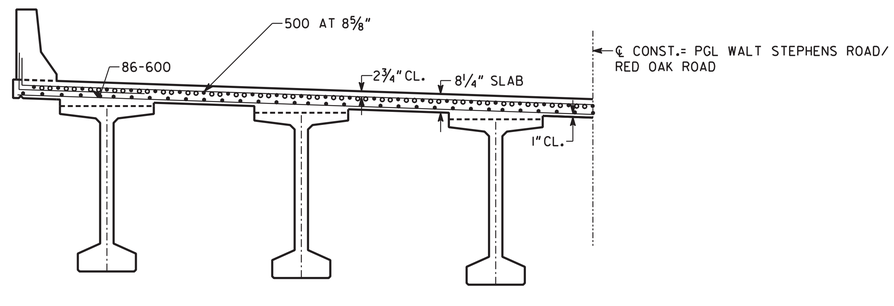

HALF-SECTION THRU SLAB AT INTERMEDIATE BENT

1 INCH WHEN PRINTED FULL SIZE

BRIDGE NO. 1

Moreland Altobelli Associates, Inc.
2211 Beaver Ruin Road Suite 190
Norcross, Georgia 30071
Tel.: (770) 263-5945

GEORGIA
DEPARTMENT OF TRANSPORTATION
ENGINEERING DIVISION-OFFICE OF BRIDGES AND STRUCTURES

DECK SECTIONS
WALT STEPHENS ROAD OVER I-75
HENRY COUNTY P.I. 0010126

REVISIONS	BY	DATE
PHASE 2 CONSTRUCTION	JPM	09-12-2012

DRAWING NO. 35-04
BRIDGE SHEET 4 OF 13

SCALE : ⅜" = 1'-0" MAY 2012

DESIGNED	PEP	CHECKED	ENC/GSJ	REVIEWED	WMD
DRAWN	DAW	DESIGN GROUP	SWW	APPROVED	BFR

RELEASED FOR CONSTRUCTION
SEPTEMBER 12, 2012

...\Bridge\Final\12DB01_0104ds.dgn 9/13/2012 11:59:51 AM