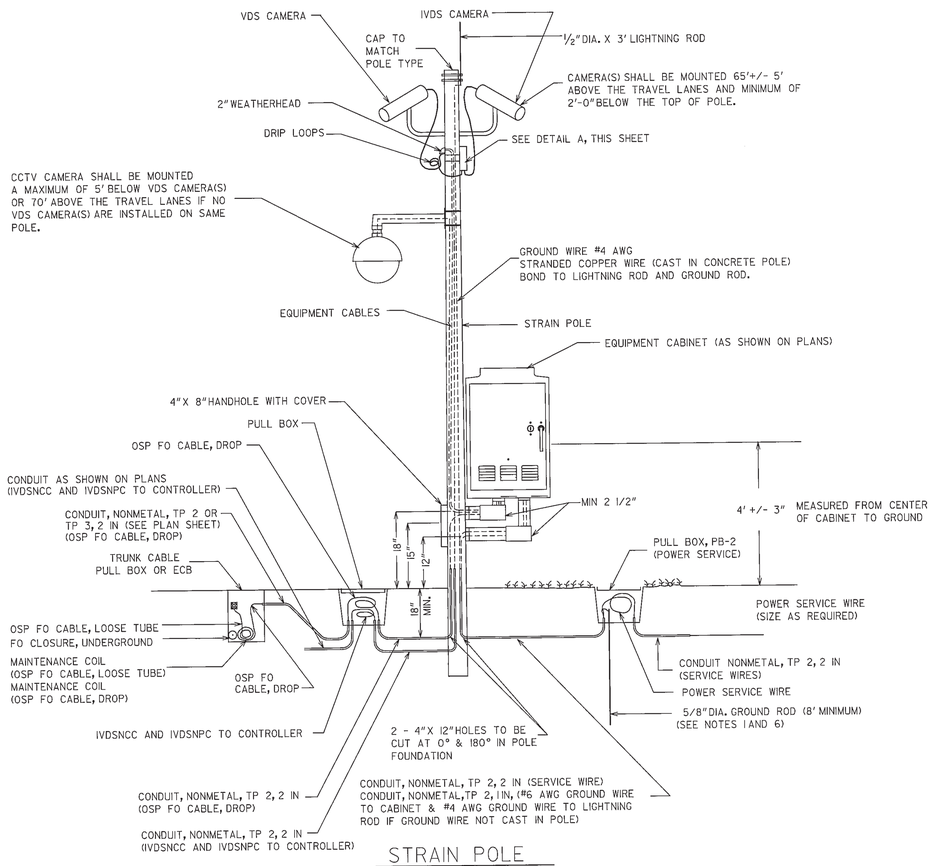

STRAIN POLE
(ELEVATION VIEW)

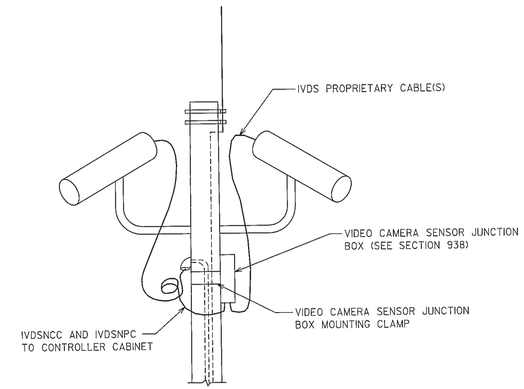

DETAIL A: IVDS JUNCTION BOX
(ELEVATION VIEW)

GENERAL NOTES

1. POLE GROUNDING AND LIGHTNING PROTECTION SHALL BE IN ACCORDANCE WITH SECTIONS 639, 647 AND 924 OF THE SPECIFICATIONS.

2. THE CABINET SHALL BE LOCATED ON THE SIDE OF POLE AS SHOWN ON THE PLAN SHEETS. IF CABINET LOCATION ON PLANS DIFFERS FROM LOCATION SHOWN ON THIS DETAIL, THE CONDUIT ENTRY HOLES (FOR CONDUITS FROM POLE TO CABINET) SHALL BE ROTATED SUCH THAT THESE HOLES ARE LOCATED DIRECTLY BENEATH THE CABINET. ADDITIONALLY THE HANDHOLE SHALL BE ROTATED SUCH THAT THE HANDHOLE IS LOCATED 180° FROM CONDUIT ENTRY HOLES.

3. ALL CABLE ENTRANCES IN OR OUT OF POLE SHALL BE BY A WEATHERHEAD OR RIGID METALLIC CONDUIT BODY WITH A THREADED NIPPLE INSTALLED IN A THREADED COLLAR. THE THREADED COLLAR SHALL BE DESIGNED AND INSTALLED AT THE POINT OF POLE MANUFACTURE. FIELD DRILLING SHALL NOT BE PERMITTED.

4. CONDUITS SHALL BE INSTALLED IN THE FOUNDATIONS OF ALL NEW SUPPORT POLES, INCLUDING LOCATIONS SHOWN IN THE PLANS FOR AERIAL COMMUNICATIONS AND/OR ELECTRICAL POWER SERVICE. IN ADDITION TO THE CONDUITS SHOWN ON THE PLANS, THE CONTRACTOR SHALL INSTALL 2 - 2" AND 2 - 1" (CONDUIT, NONMETAL, TP 2). CONDUITS SHALL BE STUBBED AND CAPPED A MINIMUM OF 3' BEYOND THE NEW FOUNDATION. ONE 2" AND ONE 1" SHALL REMAIN EMPTY.

5. RISER CONDUIT BENDS, INCLUDING INTO THE BASE OF THE EQUIPMENT CABINET, SHALL BE MADE ONLY BY LL OR LR OR SIMILAR RIGID METALLIC CONDUIT BODIES AND THREADED NIPPLES. STREET ELBOWS AND SWEEPS ARE NOT PERMITTED. PROVIDE MAINTENANCE ACCESSIBILITY TO THE ACCESS COVER.

6. GROUND ROD SHALL BE A MINIMUM OF 6" AND A MAXIMUM OF 10" ABOVE PULL BOX DRAINAGE GRAVEL.

7. STRAIN POLES SHALL BE PLACED A MINIMUM OF 32 FEET FROM TRAVEL LANE (CLEAR ZONE) UNLESS SHOWN OTHERWISE ON THE PLAN SHEET. IF CLEAR ZONE REQUIREMENTS CANNOT BE MET, CONTRACTOR SHALL CONTACT THE ENGINEER FOR CLARIFICATION.

GEORGIA
DEPARTMENT OF TRANSPORTATION

- NO SCALE -

REVISION DATES		
12/14/2006		

STATE OF GEORGIA
DEPARTMENT OF TRANSPORTATION
OFFICE: TRAFFIC SAFETY & DESIGN
ATMS PLANS

CCTV/VDS/IVDS ASSEMBLY AND TYPICAL ERECTION DETAIL

ITS-04
DRAWING No. 28-09

...\atms\its-04-ccTV_vds_ivds.dgn 11/12/2012 7:41:40 PM