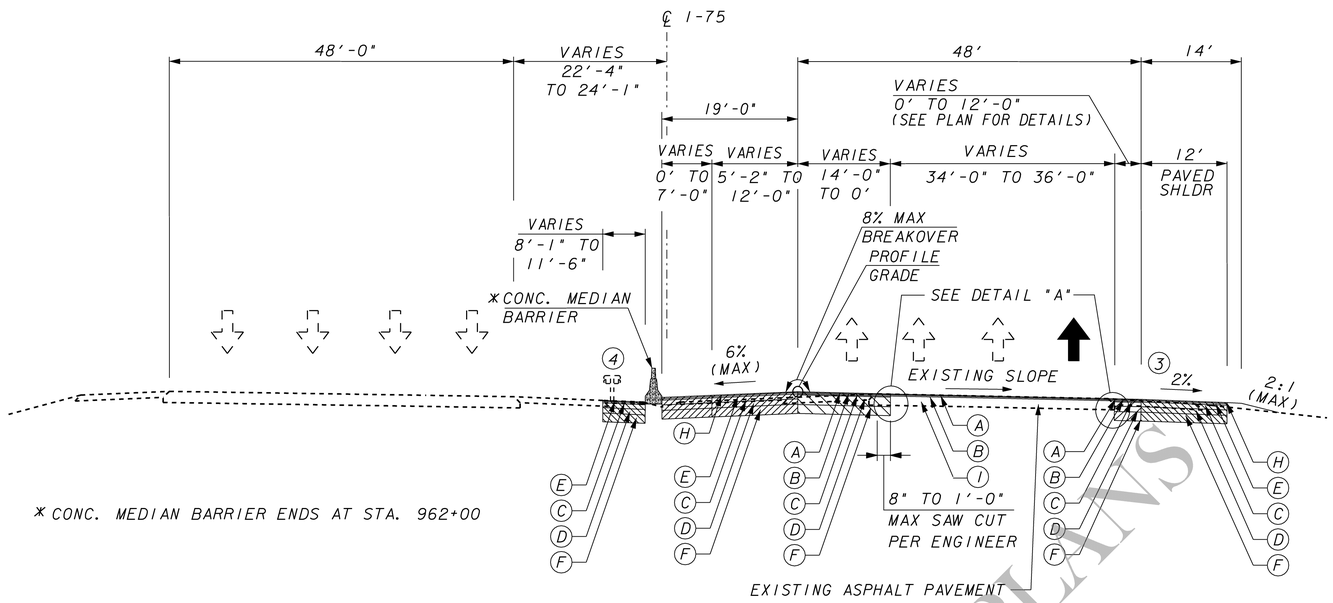

* CONC. MEDIAN BARRIER ENDS AT STA. 962+00

TYPICAL SECTION 4

STA 952+49.55 TO STA 963+04.97

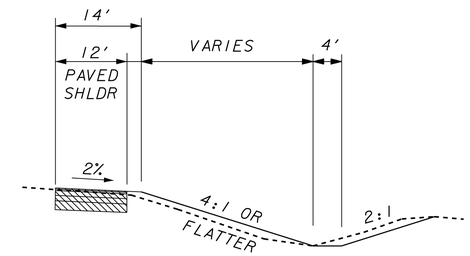

DITCH DETAIL

NOTES:

1. SEE TYPICAL SHOULDER DETAIL FOR GUARDRAIL ON DRAWING NO. 5-04.
2. SEE DRAWING NO. 5-06 FOR DETAIL "A".
3. SHOULDER SLOPE VARIES FROM 4% AT STA. 952+49.55 TO 2% AT STA. 953+50.
4. REMOVE EXISTING GUARDRAIL BETWEEN STA. 952+49.55 AND 955+11.54 REMOVE AND REPLACE EXISTING PAVEMENT BETWEEN STA. 952+49.55 AND 962+00 PER DIRECTIONS OF ENGINEER.

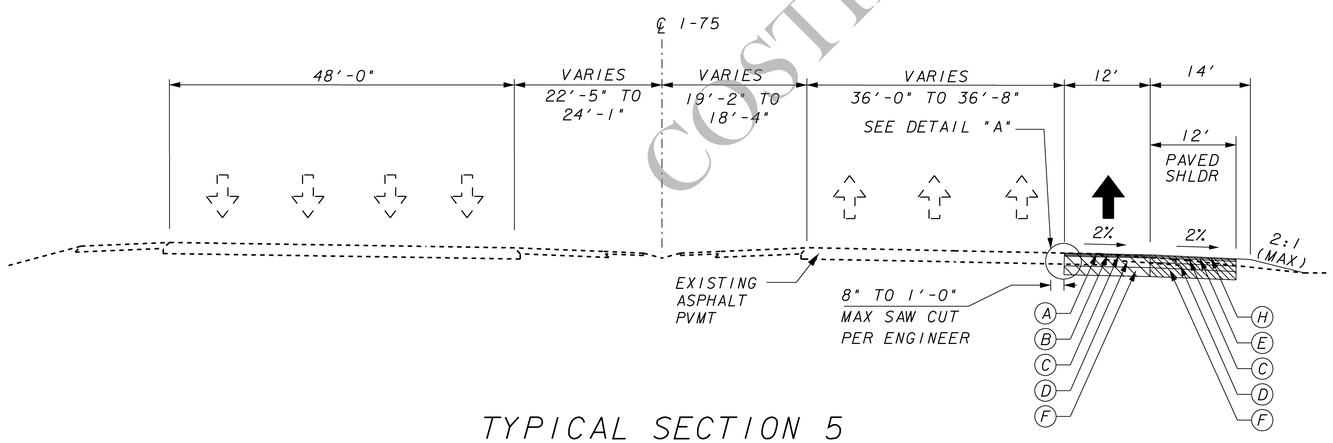

TYPICAL SECTION 5

STA 963+04.97 TO STA 977+94.34

REQUIRED PAVEMENT

- (A) ASPH CONC 12.5 MM PEM, GP 2 ONLY, INCL POLYMER-MODIFIED BITUM MATL & H LIME. 135 LBS/SY
- (B) ASPH CONC 12.5 MM SMA, GP 2 ONLY, INCL POLYMER-MODIFIED BITUM MATL & H LIME. 220 LBS/SY
- (C) RECYCLED ASPH CONC 19 MM SUPERPAVE, GP 1 OR 2, INCL BITUM MATL & H LIME. 220 LBS/SY
- (D) RECYCLED ASPH CONC 25 MM SUPERPAVE, GP 1 OR 2, INCL BITUM MATL & H LIME. 1430 LBS/SY
- (E) RECYCLED ASPH CONC 12.5 MM SUPERPAVE, GP 1 OR 2, INCL BITUM MATL & H LIME. 165 LBS/SY
- (F) GR AGGR BASE CRS, 12 INCH, INCL MATL
- (H) INDENTATION RUMBLE STRIPS - GROUND-IN-PLACE (CONTINUOUS).
- (I) MILL ASPH CONC PVMT, 2¾ IN DEPTH

COSTING PLANS