TYPICAL SECTIONS

FULTON COUNTY SRTS

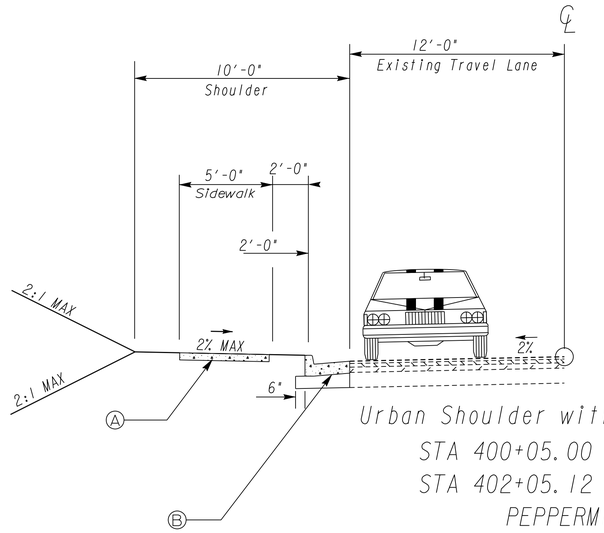

Urban Shoulder with Grass Strip Left Side
STA 400+05.00 TO 401+60.23
STA 402+05.12 TO 403+57.18
PEPPERMILL LN
TYPICAL SECTION (1)

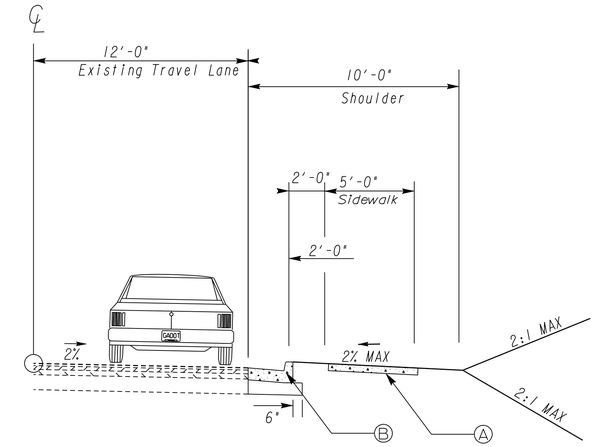

Urban Shoulder with Grass Strip Right Side
STA 11+72.31 TO 14+16.45 SCARBOROUGH RD
TYPICAL SECTION (2)

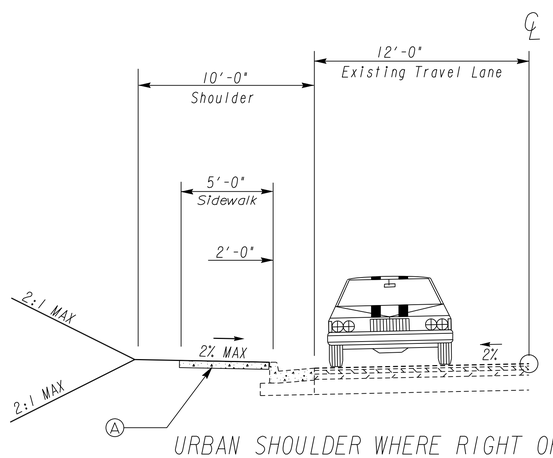

URBAN SHOULDER WHERE RIGHT OF WAY IS LIMITED LEFT SIDE
STA 500+08.41 TO 501+60.00 NOLAN SCHOOL DRIVE EXIT
STA 200+30.89 TO 202+90.24 SEABORN LEE DRIVEWAY EXIT
TYPICAL SECTION (3)

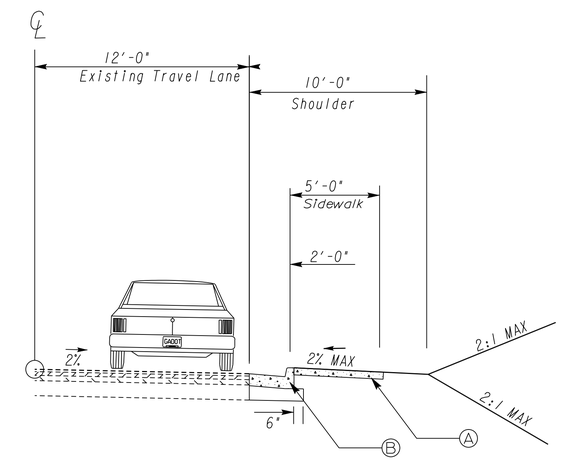

URBAN SHOULDER WHERE RIGHT OF WAY IS LIMITED RIGHT SIDE
STA 200+17.5 TO 209+25.00 GREENBOWER LN
STA 300+33.54 TO 308+59.99 GREENBOWER LN
TYPICAL SECTION (4)

REQUIRED PAVEMENT

(A) CONCRETE SIDEWALK, 4 IN THICK
(B) CONC. CURB AND GUTTER TP. 2 (GA STD 9032-B), 6 IN X 24 IN

GEORGIA
DEPARTMENT OF TRANSPORTATION

NOT TO SCALE

REVISION DATES

STATE OF GEORGIA
DEPARTMENT OF TRANSPORTATION
OFFICE: DISTRICT 7 ROAD DESIGN
TYPICAL SECTIONS
SRTS-LOVE NOLAN ELEMENTARY
SEABORN LEE ELEMENTARY
DRAWING No. 05-001