STATE	PROJECT NUMBER	SHEET NO.	TOTAL SHEETS
GA.	0010014	41	59

SEE T-22A and T-22B FOR BRIDGE DELINEATION DETAILS

LOCATION OF OBJECT MARKERS AT CULVERT ENDS

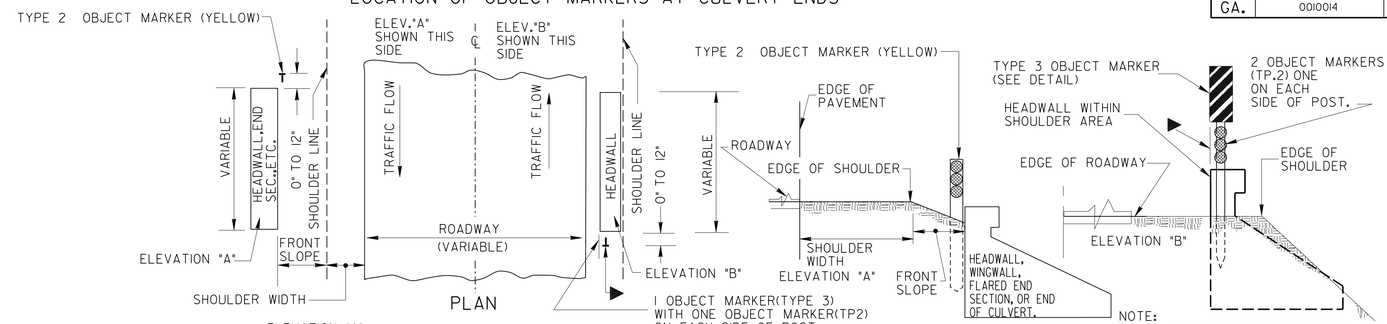

ELEVATION "A"
ONE OBJECT MARKER (YELLOW) (TYPE 2) SHALL BE USED WHERE HEADWALLS, FLARED END SECTIONS, OR CULVERT ENDS ARE LOCATED WITHIN THE FRONT SLOPE AS SHOWN IN ELEVATION "A" DETAIL.

ELEVATION "B"
A COMBINATION OF ONE OBJECT MARKER (TYPE 3) AND TWO OBJECT MARKERS (YELLOW) (TYPE 2), ONE ON EACH SIDE OF THE POST, SHALL BE USED WHERE HEADWALLS OF CULVERTS ARE LOCATED WITHIN THE EXISTING SHOULDER AREA AS SHOWN IN ELEVATION "B" DETAIL.

▶=THE INSIDE EDGE OF THE MARKER SHALL BE IN LINE WITH THE INNER EDGE OF THE OBSTRUCTION

NOTE:
ON MAJOR DRAINAGE STRUCTURES ON FEDERAL RESURFACING PROJECTS, WHEN ELEVATION "B" EXISTS, THE FIELD REVIEW TEAM WILL RECOMMEND WHICH TO USE; GUARDRAIL, ADDITIONAL DELINEATION, OR EXTENSION OF DRAINAGE STRUCTURE.

RECOMMENDED SPACING FOR DELINEATORS

DELINEATORS SHOULD NORMALLY BE SPACED 528' APART. WHERE SUCH IS INTERRRUPTED BY DRIVEWAYS, CROSSROADS, ETC., AND WHERE UNDER THE NORMAL SPACING, A DELINEATOR WOULD FALL WITHIN SUCH AN AREA, THAT DELINEATOR MAY BE MOVED IN EITHER DIRECTION A DISTANCE NOT EXCEEDING 1/4 (132') OF THE NORMAL SPACING. IF SUCH DELINEATOR STILL FALLS WITHIN THAT AREA, IT SHOULD BE ELIMINATED. SEE TABLE BELOW FOR RECOMMENDED SPACING OF HORIZONTAL CURVES.

TABLE SPACING (1) FOR DELINEATORS ON HORIZONTAL CURVES

RADIUS OF CURVE (IN FEET)	SPACING ON CURVE (IN FEET)	SPACING IN ADVANCE & BEYOND CURVE (IN FEET) (MAINLINE ONLY)		
		1ST	2ND	3RD
50	20	40	65	125
150	30	60	90	180
200	35	70	110	215
250	40	85	125	250
300	50	95	145	290
400	55	110	170	300
500	65	125	190	300
600	70	140	210	300
700	75	150	230	300
800	80	165	245	300
900	85	175	260	300
1000	90	185	275	300

(1) SPACING, S, FOR SPECIFIC RADII NOT SHOWN MAY BE INTERPOLATED FROM THE TABLE OR COMPUTED FROM THE FORMULA $S=3\sqrt{R-50}$, WHERE R IS THE RADIUS OF CURVATURE IN FT. AND S IS ROUNDED TO THE NEAREST 5 FT. THE SPACING TO THE FIRST DELINEATOR IN ADVANCE OF THE CURVE IS 2S, TO THE SECOND 3S, AND THE THIRD 6S, BUT NONE TO EXCEED 300 FEET, MINIMUM SPACING IS 20 FEET.

DELINEATOR ERECTION DETAILS

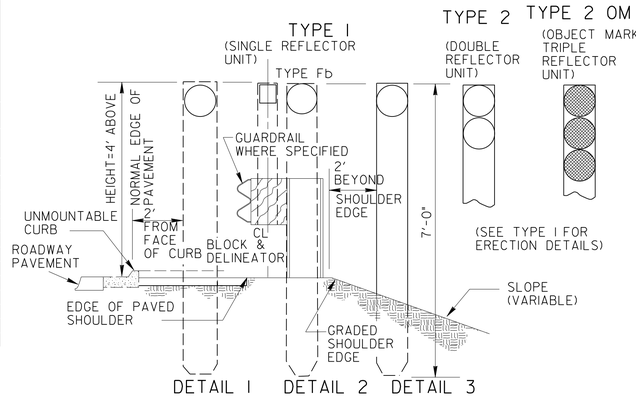

NOTE: ERECTION DETAILS ABOVE ARE TYPICAL FOR ALL TYPES EXCEPT 1A, 2A, 3A, & Fb, WHICH ARE MOUNTED ON THE POST OR STRUCTURE ALREADY IN PLACE.

DETAIL 1: ERECTION FOR ROADWAYS HAVING UNMOUNTABLE CURBS.

DETAIL 2: ERECTION FOR ROADWAY WITH GUARDRAIL, DELINEATOR POST SHALL BE IN THE SAME PLANE AS FACE OF GUARDRAIL POSTS, EXCEPT FOR TYPE Fb, AS SHOWN, AND POSSIBLY AT BRIDGE ENDS AS INDICATED ABOVE.

DETAIL 3: ERECTION FOR ROADWAYS HAVING SHOULDERS(WITHOUT CURBS).WITH MOUNTABLE CURBS, ERECTION SHALL BE SAME AS DETAIL 3.

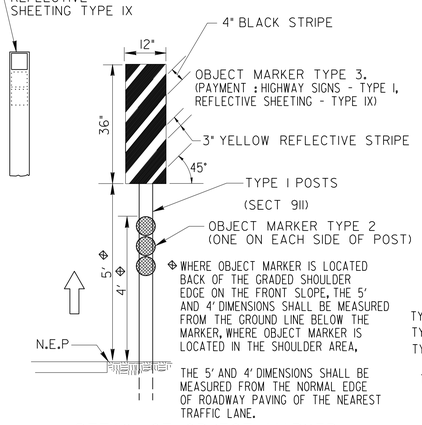

DETAIL OF OBJECT MARKER

TYPES OF DELINEATORS

TYPE 1 - ALUMINUM OR GALVANIZED STEEL FLANGED "U" CHANNEL POST WITH SINGLE REFLECTOR UNIT. REFLECTOR UNIT TO CONSIST OF: (A) ONE 3" DIAMETER SEALED PRISMATIC REFLEX REFLECTOR WITH PLATE AND FRAME, OR, (B) ONE 4" X 5" RECTANGULAR TYPE 1, LEVEL A REFLECTIVE SHEETING REFLECTOR WITH PLATE AND FRAME, OR (C) ONE 3 1/4" DIAMETER CENTER MOUNT SEALED PRISMATIC REFLEX REFLECTOR HOUSED IN ALUMINUM BACKING WITH SINGLE GROMMETTED HOLE IN CENTER OF REFLECTOR.

TYPE 2 - ALUMINUM OR GALVANIZED STEEL FLANGED "U" CHANNEL POST WITH DOUBLE REFLECTOR UNIT. REFLECTOR UNIT TO CONSIST OF: (A) TWO 3" DIAMETER SEALED PRISMATIC REFLEX REFLECTORS WITH PLATE AND FRAME, OR, (B) TWO 4" X 5" RECTANGULAR TYPE 1, LEVEL A REFLECTIVE SHEETING REFLECTORS WITH PLATE AND FRAME, OR (C) TWO 3 1/4" DIAMETER CENTER MOUNT SEALED PRISMATIC REFLEX REFLECTOR HOUSED IN ALUMINUM BACKING WITH SINGLE GROMMETTED HOLE IN CENTER OF EACH REFLECTOR.

TYPE 3 - ALUMINUM OR GALVANIZED STEEL FLANGED "U" CHANNEL POST WITH TRIPLE REFLECTOR UNIT. REFLECTOR UNIT TO CONSIST OF: (A) THREE 3" DIAMETER SEALED PRISMATIC REFLEX REFLECTORS WITH PLATE AND FRAME, OR, (B) THREE 4" X 5" RECTANGULAR TYPE 1, LEVEL A REFLECTIVE SHEETING REFLECTORS WITH PLATE AND FRAME, OR (C) THREE 3 1/4" DIAMETER CENTER MOUNT SEALED PRISMATIC REFLEX REFLECTORS HOUSED IN ALUMINUM BACKING WITH SINGLE GROMMETTED HOLE IN CENTER OF EACH REFLECTOR.

TYPE 1A-SINGLE, TYPE 2A-DOUBLE, TYPE 2 OM-TRIPLE — REFLECTOR UNIT ONLY MOUNTED ON POST OR STRUCTURE ALREADY IN PLACE. REFLECTOR UNIT SAME AS FOR TYPE 1, 2, AND 2 OM, RESPECTIVELY.

TYPE Fa, TYPE Fb — FLEXIBLE DELINEATOR POSTS SHALL BE USED AT LOCATIONS WHERE HIGH FREQUENCY OF HITS ARE CONTEMPLATED , SUCH AS GORE AREAS, OUTSIDE OF SHARP CURVES, ETC., AND MAY ALSO BE USED AS ALTERNATIVES TO EITHER TYPE 1, TYPE 2, OR TYPE 3 DELINEATORS WHEN SPECIFIED ON THE PLANS.DIFFERENT DESIGN FLEXIBLE DELINEATORS PERMITTED,IF APPROVED BY THE GA. D.O.T. OFFICE OF MATERIALS AND RESEARCH.

LOCATION OF DELINEATORS ON FREEWAY & EXPRESSWAY TYPE HIGHWAYS

TYPES OF DELINEATORS, ERECTION LOCATION , AND SPACING SHALL BE AS FOLLOWS.

○ SINGLE CRYSTAL(WHITE) REFLECTOR UNITS (TYPE 1 DELINEATOR) ON RIGHT SIDE OF MAINLINE AT 528 FOOT SPACING & ON RT. SIDE OF RAMP TGT. SECTIONS AT 100 FOOT SPACING FROM PHYSICAL CORE TO RAMP TERMINUS.

○○ DOUBLE CRYSTAL(WHITE) REFLECTOR UNITS (TYPE 2 DELINEATOR) ON RIGHT SIDE OF SPEED CHANGE (ACCELERATION & DECELERATION) LANES THAT ARE ON RIGHT SIDE OF MAINLINE AT 100 FOOT SPACING FROM TAPER TO PHYSICAL CORE.

● (YELLOW) SINGLE YELLOW REFLECTOR UNITS (TYPE 1 DELINEATOR) ON LEFT SIDE OF RAMP HORIZONTAL CURVES & ON LEFT SIDE OF MAINLINE HORIZONTAL CURVES GREATER THAN 3° CURVATURE.

●● (YELLOW) DOUBLE YELLOW REFLECTOR UNITS (TYPE 2 DELINEATOR) ON LEFT SIDE OF SPEED CHANGE (ACCELERATION & DECELERATION) LANES THAT ARE ON LEFT SIDE OF MAINLINE AT 100 FOOT SPACING FROM TAPER TO PHYSICAL CORE.

● (RED) SINGLE REFLECTOR UNITS (TYPE 1 DELINEATOR) ON LEFT SIDE OF EXIT RAMPS AT 100 FOOT SPACING FROM "WRONG WAY" SIGN TO RAMP TERMINUS. USE TYPE 1A RED DELINEATORS ON RIGHT OR LEFT SIDE OF EXIT RAMPS WHERE TYPE 1 WHITE OR YELLOW DELINEATORS ARE USED FACE OF RED DELINEATORS ORIENTED OPPOSITE TO NORMAL TRAFFIC FLOW.

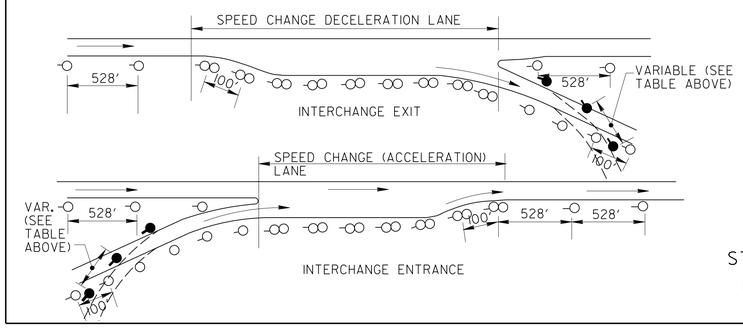

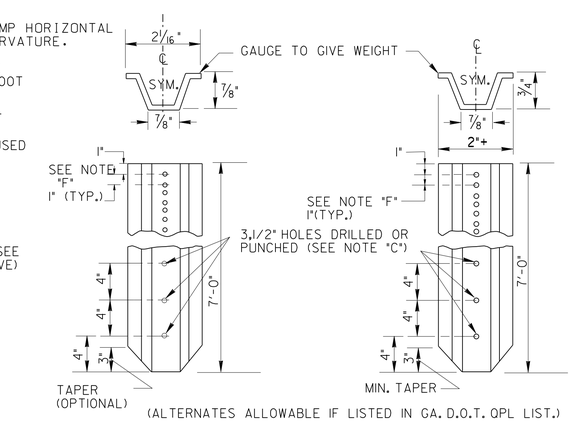

(ALTERNATES ALLOWABLE IF LISTED IN GA. D.O.T. OPL LIST.)

STEEL FLANGED "U" CHANNEL POST (1.12 LBS./FT.) (GALVANIZED)

ALUMINUM FLANGED "U" CHANNEL POST (0.78 LBS/FT.)

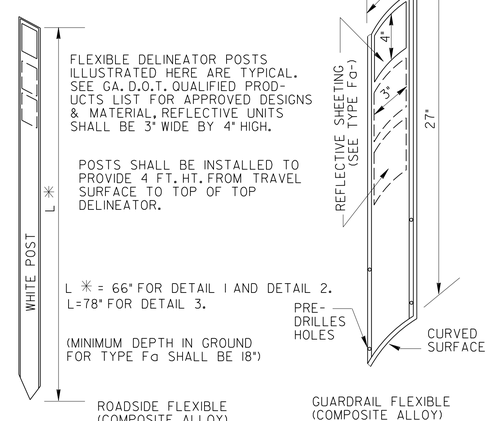

ROADSIDE FLEXIBLE (COMPOSITE ALLOY) DELINEATOR POST

TYPE Fa-1 (ONE REFLECT.)
TYPE Fa-2 (TWO REFLECT.)
TYPE Fa-2 OM (THREE REFLECT.)

GUARDRAIL FLEXIBLE (COMPOSITE ALLOY) DELINEATOR POST

TYPE Fb-1 (ONE REFLECT.)
TYPE Fb-2 (TWO REFLECT.)
TYPE Fb-2 OM (THREE REFLECT.)

GENERAL NOTES:

A- SPECIFICATIONS: GA. STANDARD, CURRENT EDITION, & SUPPLEMENTS THERETO.

B- REFLECTORS FOR TYPES 1 AND 1A SHALL BE CRYSTAL (WHITE) .YELLOW OR RED, AS SPECIFIED ON THE PLANS. REFLECTORS FOR TYPES 2 AND 2A SHALL BE CRYSTAL (WHITE) OR YELLOW AS SPECIFIED ON THE PLANS. REFLECTORS FOR TYPE 3 AND 3A SHALL BE YELLOW ONLY AS SPECIFIED ON THE PLANS.

C- WHEN POSTS ARE SET IN CONCRETE, METAL RODS SHALL BE INSERTED IN 3,1/2" DIA. HOLES LOCATED AT BOTTOM OF POST. MIN SIZE OF RODS SHALL BE 1/4" DIA. X 3" LONG.

D- MONODIRECTIONAL DELINEATORS SHALL BE USED AND ERECTED AT THE RECOMMENDED SPACING, UNLESS OTHERWISE SPECIFIED ON THE PLANS.

E- FOR ADDITIONAL DATA ON DELINEATORS, REFER TO THE MANUAL ON UNIFORM TRAFFIC CONTROL DEVICES AND ALL SUPPLEMENTS THERETO.

F- DRILL OR PUNCH 17, 3/8" DIA. HOLES ON 1" CENTERS FOR A DISTANCE OF 17" MINIMUM FROM TOP POST.

BY	REVISION	DATE
GLO	REV. OBJECT MARKER TYPE.	4-10-06
	DELETED DETAIL AND REV.	
	REFLECTIVE SHEETING TYPE.	

DEPARTMENT OF TRANSPORTATION
STATE OF GEORGIA

STANDARD

DELINEATORS & MARKERS AND ALTERNATE POSTS

NO SCALE — REV. & REDR. MAR., 2001

DES. ____ REV. ____ TRA. ____ CHK. ____

(SUBMITTED) STATE ROAD & AIRPORT DESIGN ENGINEER
(APPROVED) CHIEF ENGINEER

NUMBER 9030C