STATE	PROJECT NUMBER	SHEET NO.	TOTAL SHEETS
GA.	0009725	209	334

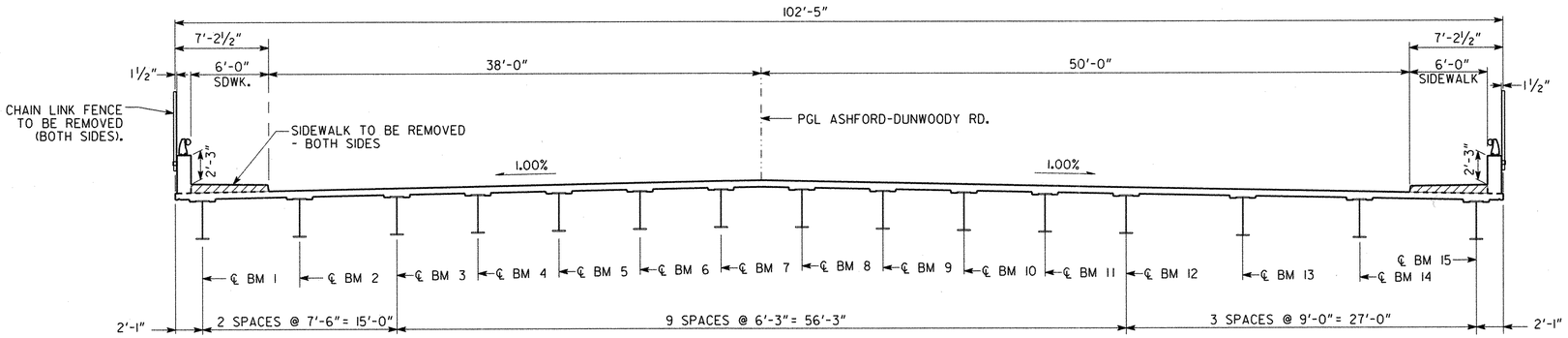

TYPICAL SECTION - EXISTING

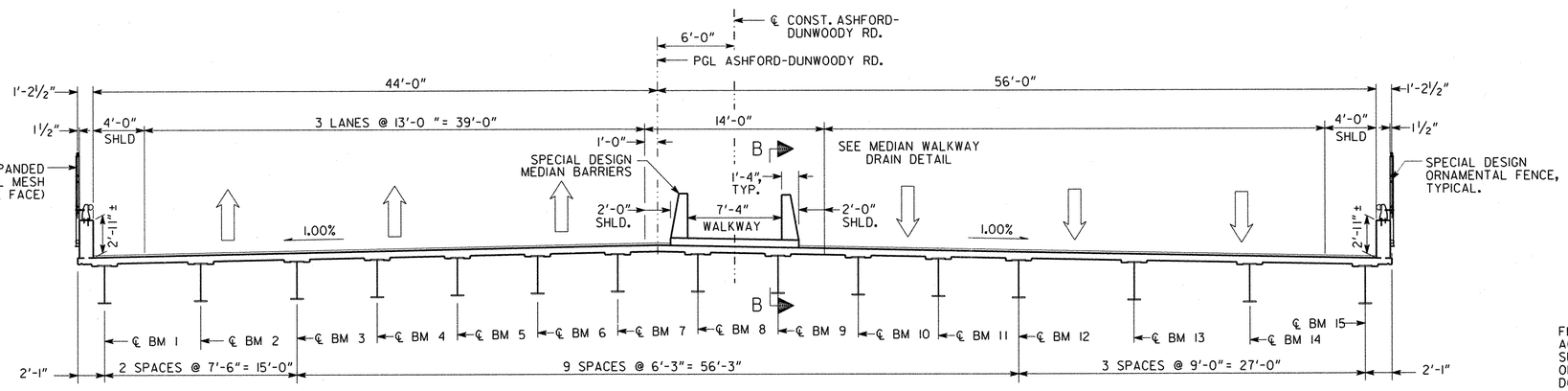

TYPICAL SECTION - PROPOSED

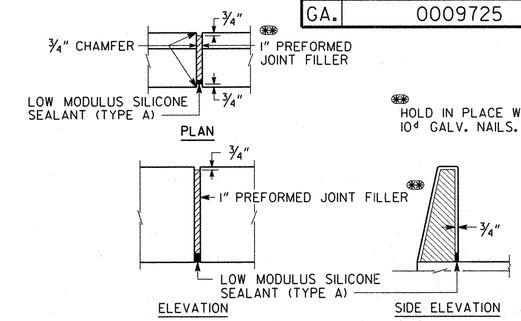

DETAILS OF 1" EXPANSION JOINT IN BARRIER

(PEDESTRIAN WALKWAY)

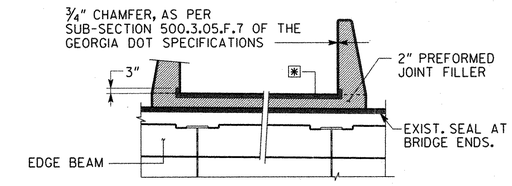

DETAILS OF 2" EXPANSION JOINT

(AT BRIDGE ENDS - PEDESTRIAN WALKWAY)

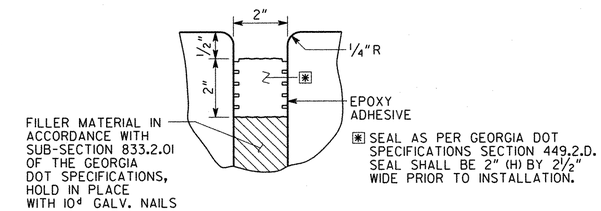

LONGITUDINAL SECTION

EXPANSION JOINT DETAILS

(AT BRIDGE ENDS)

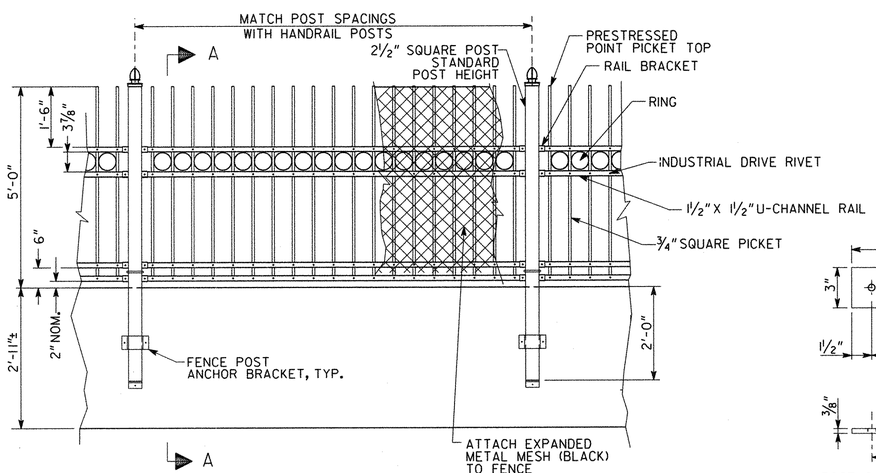

FENCE DETAIL

(FENCE WITH STANDARD ACORN POST CAP)

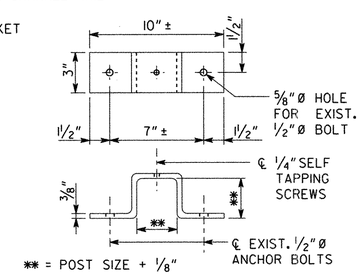

BRACKET DETAIL

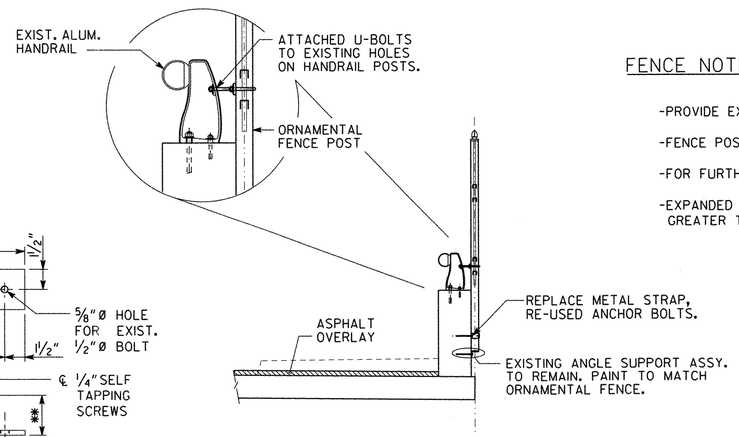

SECTION A-A

FENCE NOTES:

-PROVIDE EXPANSION SLEEVE FOR ALL RAILS TO MATCH SUPERSTRUCTURE JOINTS.

-FENCE POST SPACING = ℄ EXISTING HANDRAIL POST SPACING.

-FOR FURTHER DETAILS, SEE GEORGIA DOT SPECIFICATIONS SPECIAL PROVISION SECTIONS 643.

-EXPANDED METAL MESH SHALL BE FASTENED TO POST AT INTERVALS NOT GREATER THAN 14".

BRIDGE NO. 1

Moreland Altobelli Associates, Inc.
2211 Beaver Ruin Road Suite 190
Norcross, Georgia 30071
Tel.: (770) 263-5945

GEORGIA

DEPARTMENT OF TRANSPORTATION

ENGINEERING DIVISION-OFFICE OF BRIDGES AND STRUCTURES

REVISIONS	BY	DATE

MISCELLEANEOUS DETAILS 1

ASHFORD-DUNWOODY RD. OVER I-285

DEKALB COUNTY 0009725

NO SCALE MARCH 2011

DRAWING NO.	DESIGNED ENC	CHECKED QSJ	REVIEWED WEI/WMD
35-03	DRAWN ENC	DESIGN GROUP WEI	APPROVED BFR
BRIDGE SHEET 3 OF 4			

1 INCH WHEN PRINTED FULL SIZE

X.DGN

..\Final\DPC1D001br0103misc01.dgn 05/10/2011 09:49:49 AM