STATE	PROJECT NUMBER	SHEET NO.	TOTAL SHEETS
GA	0009725	196	334

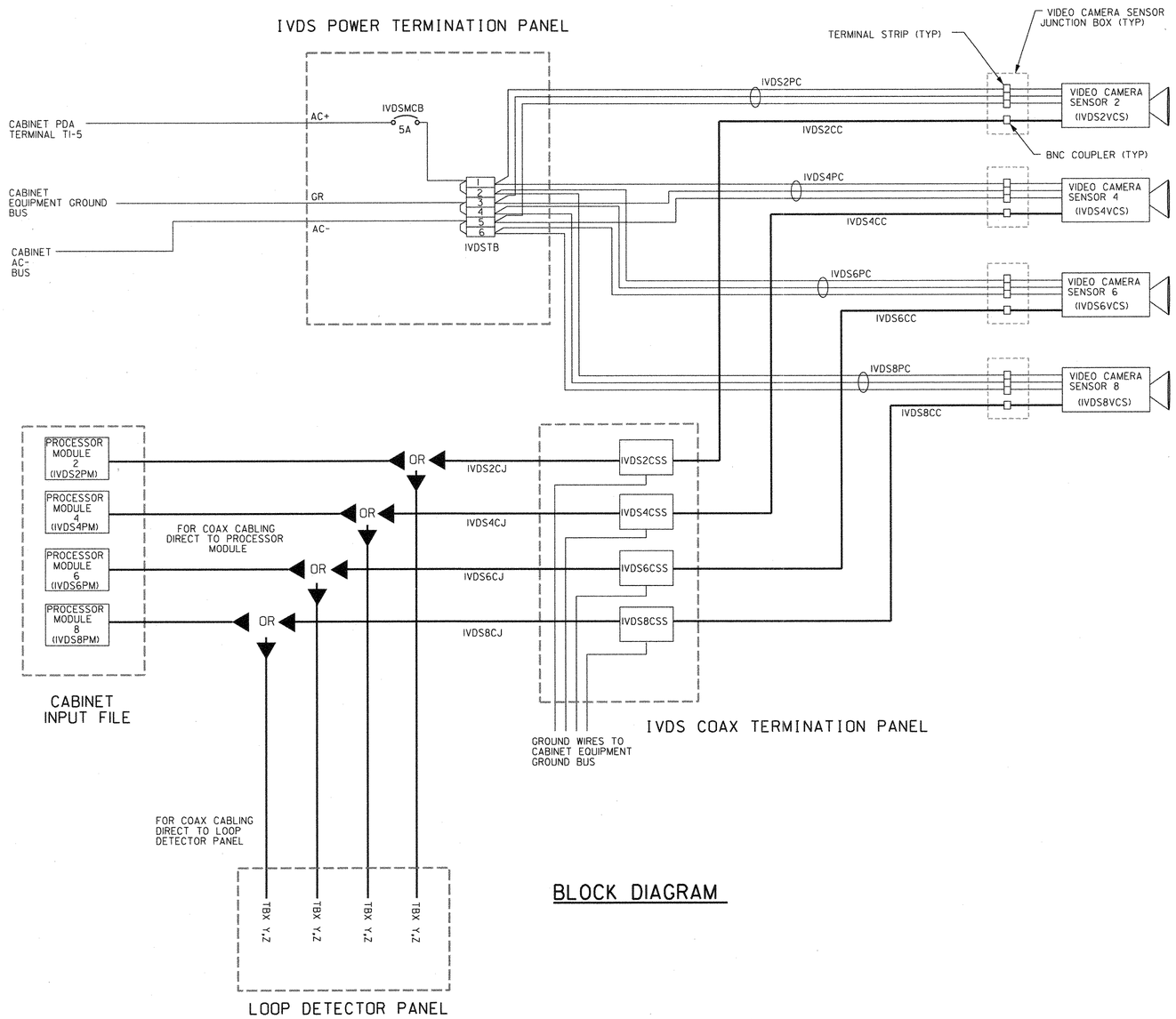

BLOCK DIAGRAM

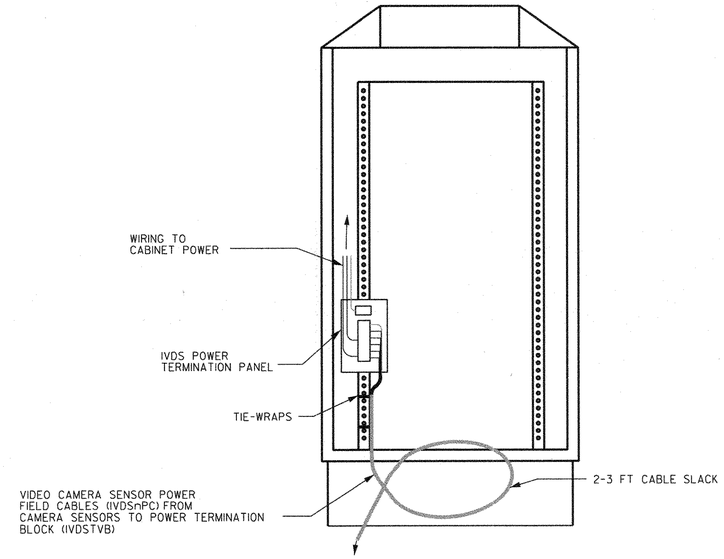

332 OR 336S CABINET-REAR VIEW

NTS

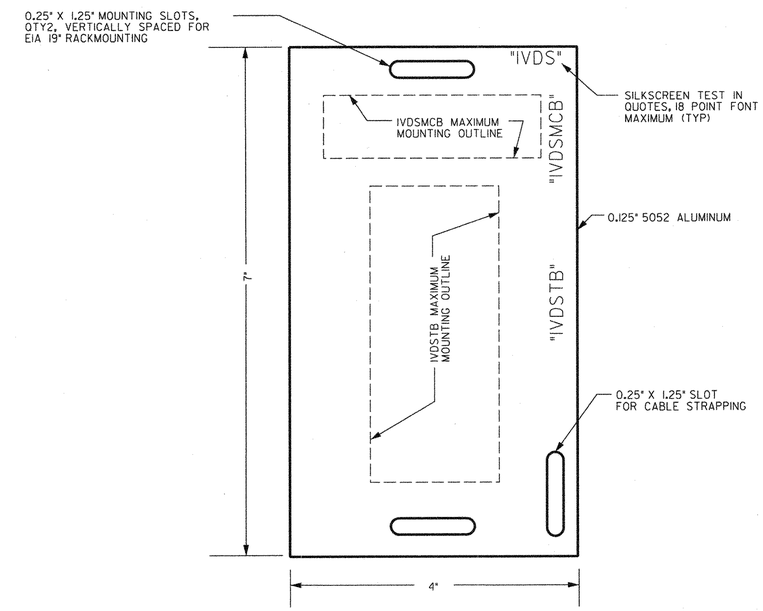

IVDS POWER TERMINATION PANEL

NTS

GEORGIA DEPARTMENT OF TRANSPORTATION

- NO SCALE -

DATE	REVISIONS

STATE OF GEORGIA
DEPARTMENT OF TRANSPORTATION
OFFICE: TRAFFIC SAFETY & DESIGN

SIGNAL PLANS

IVDS DETAILS
BLOCK DIAGRAM/POWER TERM PANEL

APRIL 2001

DRAWING No. 27-18

\hwy\dgn\0009725sg18.dgn May 09 2011 16:20:15